TV

USER INSTRUCTIONS

55 GUB 8855

EN

www.grundig.com

GRUNDIG

TABLE OF CONTENTS

5 SET-UP AND SAFETY

7 GENERAL INFORMATION
7 Special features of your television set
8 Receiving digital stations
8 GRUNDIG SCR System
8 Important notes on environmental protection
8 Notes on still images

9 PACKING CONTENTS
9 Standart accessory
9 Optional accessory

10 CONNECTION/PREPARATION
10 Connecting the antenna and power corda
11 Setting up or hanging
12 Inserting batteries in the remote control

13 OVERVIEW
13 Connections on the television set
16 Remote control - all functions

17 INITIAL SET-UP
17 Settings for connecting to the home network
17 Tuning channels
18 Initial set-up – overview
19 Arrange Initial set-up
23 Changing the Channel Editor for the digital channels

27 PICTURE /SOUND SETTINGS
27 Picture settings
28 Restore default settings
28 Concluding the settings
29 Sound settings
30 Restore default settings
30 Concluding the settings

31 TV OPERATION – BASIC FUNCTIONS
31 Switching on and off
31 Selecting channels
31 Selecting stations from lists
31 Selecting AV channels
31 Adjusting the volume
31 Muting
31 Displaying information
32 Audio language
32 Subtitles
32 Zap function

33 TV OPERATION – ADDITIONAL FUNCTIONS
33 Sleep timer
33 Zoom function
33 Changing the picture format
34 Audio settings
34 Picture settings

35 ELECTRONIC TV GUIDE
35 Changing the font size of the channel guide

36 HBBTV MODE
36 What is HbbTV?
37 Using HbbTV
37 Additional functions for video indexes
37 Deactivate and activate HbbTV
37 Deactivate and activate digital teletext

38 TELETEXT MODE
38 TOP text or FLOF text mode
38 Normal text mode
38 Additional functions

TABLE OF CONTENTS

39 USB OPERATION
39 File formats for USB operating
40 Connecting external data media
40 Removing the external data media
41 The file browser
41 Settings in the USB setup menu
42 Playback basic functions
43 Additional playback functions
45 Playing the video, music and image files with home network connection
45 Selecting the digital media server
46 Playback
46 Other playback options

47 SMART INTER@CTIVE TV 4.0+
47 Agreements of Terms & Conditions and Confidentiality
47 First run and operations
47 Displaying the Terms & Conditions and Confidentiality content accepted by the user and removing the acceptance
48 SMART inter@ctive TV 4.0 internet applications
48 USB keyboard and mouse
48 Getting Started with Smart Inter@ctive TV
50 Navigation on the application portal main screen
50 Application Portal Main Screen
51 Web browser menu
51 Web browser applications

52 LANGUAGE SETTINGS
52 Changing the menu language
52 Changing the audio language
52 Changing the subtitle language
52 Changing the keyboard language

53 ACCESSIBLE FUNCTIONS
53 Subtitle Mode
53 Audio description (audio subtitles)

54 ADVANCED SETTINGS
54 Auto sleep
54 Store logo view
54 Power LED brightness
55 Power save mode
55 Switching on/off weather information
55 Switching on/off help information

56 TIMER FUNCTIONS
56 Sleep timer
56 On timer (Auto On)
57 Off timer (Auto Off)

58 PARENTAL SETTINGS
58 Parental Guidance
58 Locking the menus
59 Blocking the multifunction switch
59 Changing the PIN code
59 Blocking a television channel
60 Watching a blocked television channel
60 Resetting PIN code

61 DATE AND TIME SETTINGS
61 Auto tuning
61 Manual tuning

62 SOFTWARE OF THE DEVICE
62 Product information
62 Software update (OAD)
62 Software update (Internet)
62 Software update (USB)

63 ACCESSORIES

64 RESET FUNCTIONS
64 Resetting the television to its original state
64 Deleting channel history
64 Restoring selected images

TABLE OF CONTENTS

65 USING EXTERNAL DEVICES
65 DIGI LINK
65 The Digi Link functions of the television
66 Device Control
67 High definition
67 Connection options
68 Connecting an external device
68 Using a DVD recorder, DVD player, video recorder or set-top box
68 Headphones
69 Playing the audio signal via the HiFi system
70 Cable screen share (MHL)
71 Wireless screen share (Liveshare)
71 What is LIVESHARE?
71 Screen share with Liveshare connection

72 OPERATION WITH COMMON INTERFACE
72 What is common interface?
72 Inserting the CA module
72 Access control for CA module and smart cards

73 NETWORK SETUP
73 Network connection
73 Wired network
74 Wired network settings
76 Wireless network
76 Wireless network settings
80 Change TV Name
81 Connecting the TV to a “hidden” network

82 SETTING FURTHER CHANNELS
82 Searching for all digital channels from a satellite automatically
83 Searching for digital channels from a satellite manually on a transponder
84 Antenna settings and searching for digital channels from a satellite automatically
85 Antenna settings, SCR system and searching for digital channels from a satellite automatically
86 Antenna settings for DiSEqC 1.0/1.1 and searching digital channels from a satellite automatically
88 Motor antenna setup (DiSEqC 1.2)
89 Searching for digital channels from the cable provider automatically
90 Searching for digital channels from the cable provider manually
90 Searching for digital terrestrial TV channels automatically
91 Searching for digital terrestrial TV channels manually
92 Automatic service update
92 Tuning analogue television channels
94 Changing stored analogue channels
95 Displaying signal information
96 Service information for dealers
96 Notes for WLAN reception
97 Network interfaces
97 Disposing of the packaging
97 Environmental note
97 Explanation of the symbols which may be present on back side of the television set
98 Troubleshooting

100 GLOSSARY

105 INDEX

About your TV set

- With your TV set, you can receive and watch digital TV programmes over DVB-S, DVB-T and DVB-C, along with analogue TV.
- Many features of the TV set require an Internet connection. The TV set is equipped with WLAN and a LAN port.

Intended use

- The TV set is designed for use in dry rooms.
- Use the TV set with the supplied stand or a suitable VESA bracket.
- The TV set is primarily intended for the playback of TV programmes, streaming content and audio/video material from external devices. Any other use is strictly prohibited.

  It is not intended as an information display or for predominant use as a computer monitor. If a still image or a non-full-format image is displayed for an extended period, visible traces may remain on the screen for some time.

  This is not a defect that can be used as the basis for a warranty claim.

Safety

⚠ WARNING

Risk of electrical accident

- Do not open the TV set. Safety risk may arise and also the guarantee of the product can be void if the television set is opened.
- The TV set can only be operated with the power cable or the AC/DC adapter supplied with the product.
- Do not operate the TV set with a damaged power cord/AC/DC adaptor (if supplied).
- If the plug on the TV set has an earthing contact, only insert the plug into a socket with an earthing contact.
- Plug the TV set into the mains socket only after you have connected the external devices and the antenna.
- Protect the TV set from moisture. Do not place any vessels filled with water (such as vases) on the TV.

Fire hazard

- 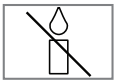
  To prevent the spread of fire, keep candles or other open flames away from this product at all times.
- Do not cover the ventilation slots on the TV set.
- Always unplug the power plug and antenna plug during a thunderstorm.
- Keep candles or other open flames away from the TV set.
- Do not expose the batteries to extreme heat such as sunshine, fire or the like.
- Only use batteries of the same type (brand, size, properties). Do not use used and new batteries together.

⚠ WARNING

Injuries caused by falling TV set

Never place the TV set on an unstable surface. The TV set may fall, causing serious injury, possibly leading to death in isolated cases.

Observe the following precautions:

- Only use the manufacturer's recommended cabinets or stands.
- Only use furniture that can safely support the TV set.
- Make sure that the TV set does not protrude beyond the dimensions of the furniture on which it is resting.
- Do not place the TV set on tall furniture (such as kitchen cabinets, bookshelves) without securely anchoring the furniture and TV set.
- Do not place the TV set on fabric or other materials located between the TV set and furniture.
- Instruct children that there is danger associated with climbing on furniture when the TV set is to be reached.

NOTICE

Shortened service life due to high operating temperature

- Do not place the TV set next to heating units or in direct sunlight.
- To ensure adequate ventilation, maintain clearance of at least 10 cm around the TV set.

Discolouration of furniture due to rubber feet

- Some furniture surfaces may discolour when they come in contact with rubber. To protect furniture, you can place a sheet made of glass or plastic under the stand. Do not use textile underlays or mats such as doilies.

Environmental information

-

Do not dispose of batteries in the household waste. Used batteries must be returned to retail stores or public collection points. You help to protect the environment in this way.
- Be sure to dispose of packaging materials for your product separately according to the guidelines of local authorities so that they can be recycled in an environmentally safe manner.
- If you are not using your TV set for a while, turn it to standby mode. In standby mode, the TV set uses very little energy (≤ 0.5 W).
  If you do not use the TV set for an extended period, turn it off with the power switch or unplug the power cord from the socket.
- Select a location for the TV set so that no direct sunlight falls on the screen. This allows a lower backlight to be selected, which saves energy.
- 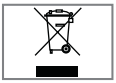
Do not dispose of the product along with normal household waste at the end of its service life. Take it to a recycling centre for electrical and electronic equipment.

Special features of your television set

- Your television set enables you to receive and watch digital stations (via DVB-S, DVB-T and DVB-C), including the High Definition (HD) ones. At present, reception for these digital television stations in High Definition is only possible in some countries in Europe.
- Although this television meets the current DVB-S, DVB-T and DVB-C standards as of August 2012, its compatibility with future DVB-S digital satellite broadcasts, DVB-T digital terrestrial broadcasts and DVB-C digital cable broadcasts is not guaranteed.
- This television can receive and process all analogue and all unencrypted digital stations. This television set has an integrated digital and analogue receiver. The digital receiver unit converts the signals from digital stations to provide outstanding audio and picture quality.
- The TV guide (only for digital stations) tells you of any schedule changes at short notice, and provides an overview of all the stations' schedules for the next few days.
- You can connect various data media, for example, an external hard drive, a USB memory stick or a digital camera to the USB sockets. Using the file browser, you can then select and play the file formats you want (for example, MP4, MP3 or JPEG data).
- SMART inter@ctive TV 4.0+ feature provides your TV with Internet applications when your TV is connected to Internet.
- Wireless USB keyboard and mouse support in the Web browsing of your television facilitates surfing through the internet pages for the user.
- DLNA feature allows you to use a wired or wireless (with wireless USN network device) local network to access your content that were recorded with DLNA compatible devices we use at our daily lives such as a PC, mobile phone or NAS (Network Attached Storage) which are operated as DMS (Digital Medial Server). While watching TV, you can play any content you like at any time by using DMC applications on your mobile device or PC without starting DLNA application.
- A DLNA compatible device such as a PC, mobile phone, NAS or a NAS-like (Network attached storage) device which operates as a DMS (Digital Media Server) is required in order to use home network.

Receiving digital stations

- To receive digital satellite stations (DVB-S) you need a satellite antenna.
- To receive digital stations (DVB-T) you need a digital rooftop or indoor antenna (passive or active indoor antenna with its own power supply).
- The antenna cable of the cable TV network that broadcast in DVB-C must be plugged into TV in order to receive the DVB-C broadcasts.
- Unlike analogue broadcasting, not every station has its own transmission frequency. Instead, several stations are grouped into what are known as bouquets on a regional or national level.
- You can find the current transmission information on teletext from various broadcasters, or look in a TV guide or on the Internet.
- Various digital television stations from private broadcasters are encrypted (DVB-S, DVB-T and DVB-C). Watching these stations and the recording and playback functions are only possible with the appropriate CI module and a SmartCard. Ask your specialist dealer.

GRUNDIG SCR System

Your TV supports SCR system (Single Channel Router). With SCR satellite system, several users can individually receive all signals from the satellite simultaneously.

Important notes on environmental protection

Those items mentioned below will help you reduce the consumption of natural resources as well as save your money by reducing electricity bills.

- If you will not be using the TV set for several days, it should be disconnected from the mains for environmental and safety reasons. TV will not consume energy in this condition.
- If the TV set has main switch, it will be enough to turn the TV off via main switch. TV will reduce energy consumption almost to Zero Watt.
- TV consumes less energy on stand by mode. However, some TV sets may have features such as on timer, that require the TV set to be left in standby to work correctly.
- TV consumes less energy when brightness is reduced.

Notes on still images

Watching the same image for a long time on the screen may cause a still image remain feebly on the background. Feeble image(s) on the background is originated from LCD/LED technology and does not require any action under guarantee. To avoid such cases and/or minimize the impact, you may observe the tips below.

- Do not allow the same TV channel to stay on the screen for a very long time. Channel logos may cause this situation.
- Do not allow the images, which are not full screen, to constantly stay on the screen; if not streamed in full screen format by the broadcaster, you can convert the images to full screen by changing picture formats.
- Higher brightness and/or contrast values will lead this impact to appear faster; therefore, you are recommended to watch your TV in the lowest brightness and contrast levels.

PACKING CONTENTS

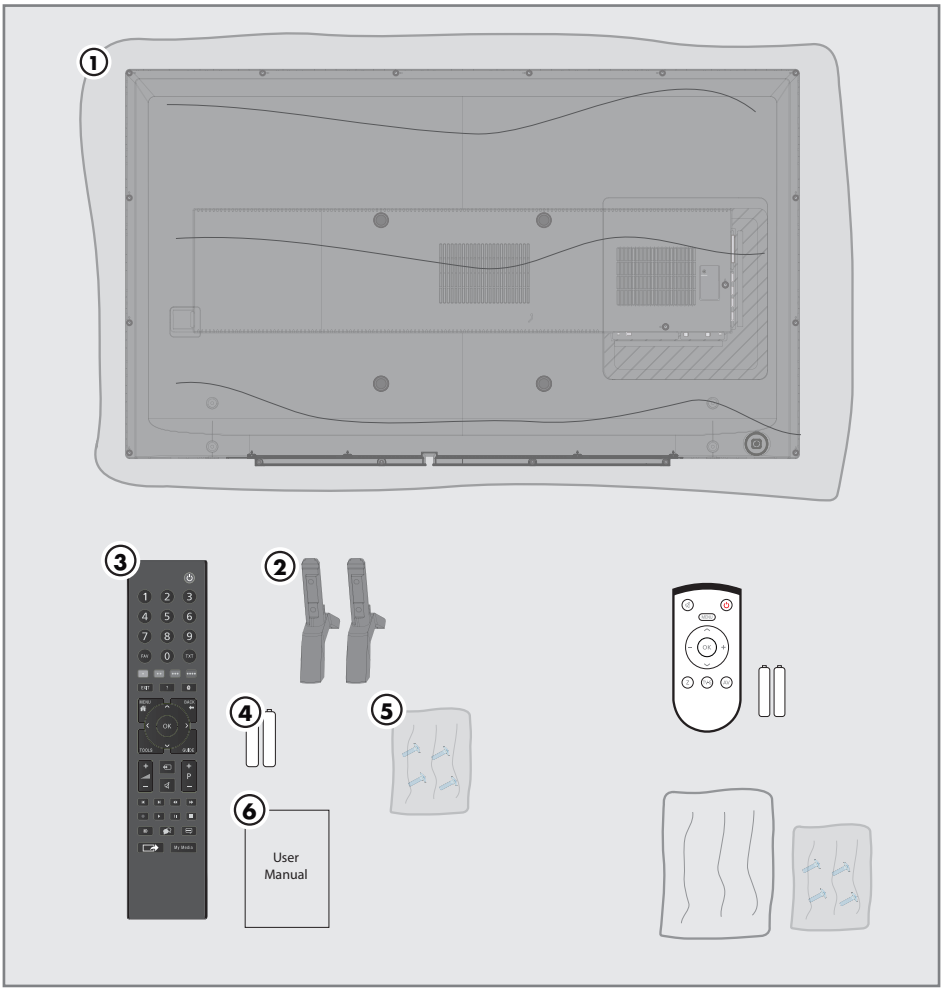

Standart accessory

1 TV
2 Stand
3 Remote control
4 Batteries for remote controls
5 Screws and mounting instructions for stand
6 Brief Instruction

Optional accessory

Easy-Use Remote Control
Batteries for Easy-Use remote controls
Cleaning cloth

Connecting the antenna and power corda

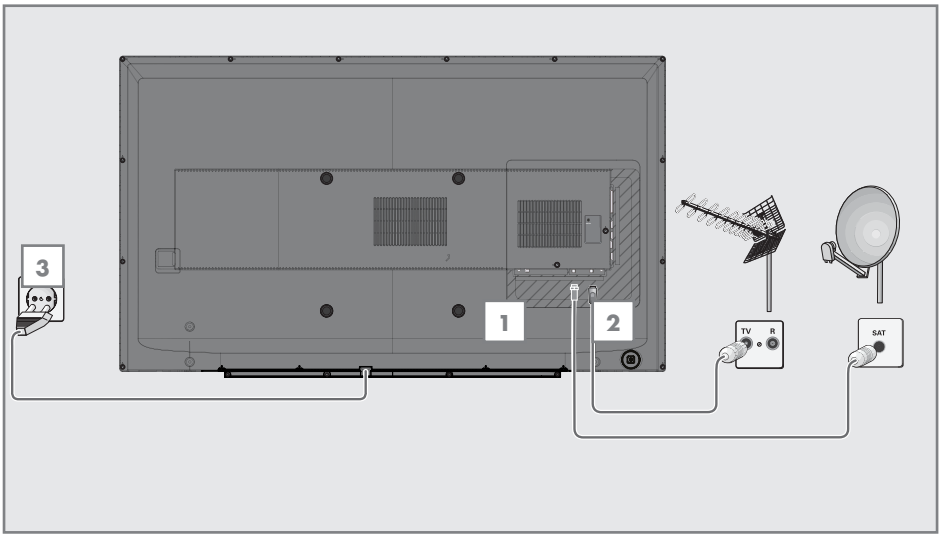

1 To receive digital satellite channels (DVB-S), connect the satellite antenna cable to the antenna socket **SATELLITE** on the television set;

2a To receive terrestrial digital broadcasters (DVB-T) connect the cable for the rooftop or indoor antenna (passive or active indoor antenna with its own power supply) to the antenna socket **ANT IN** on the television set;

or

2b To receive digital cable channels (DVB-C) connect the cable for the rooftop antenna to the antenna socket **ANT IN** on the television set;

or

2c To receive analogue TV channels, connect the cable for the rooftop antenna to the antenna socket **ANT IN** on the television set.

Note:

- When connecting an indoor antenna you may have to try it out at different positions until you get the best reception.

3 Plug the power cord into the wall socket.

Note:

- Only plug the device into the mains socket after you have connected the external devices and the antenna.
- Do not use an adapter plug or extension cable which does not meet the applicable safety standards. Do not make changes on the power cord.

Setting up or hanging

- Select a location so that no direct sunlight falls on the screen.

Setting up with stand

- To mount the stand, refer to the installation instructions included.
- Place the television set on a hard, level surface.

Preparing for mounting on the VESA bracket

You will need:

- A pair of scissors,
- A crosstip screwdriver.

Follow the installation instructions for the VESA bracket.Place the television set in the film on a smooth surface with the screen facing down.

1. Cut open the film on the back side using the scissors.
2. Connect the required cables to the connectors on the television set. See the “Connection/Preparation” section in this manual.
3. Tie the cables so they do not hang down onto the floor.
4. Screw the VESA bracket onto the television set and mount it according to its installation instructions.

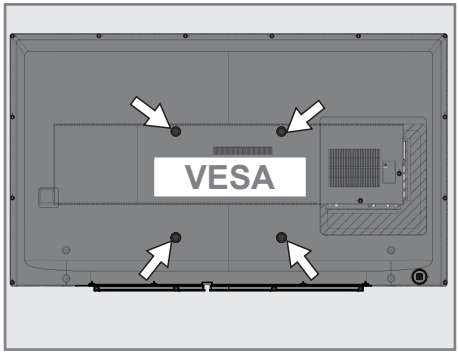

Inserting batteries in the remote control

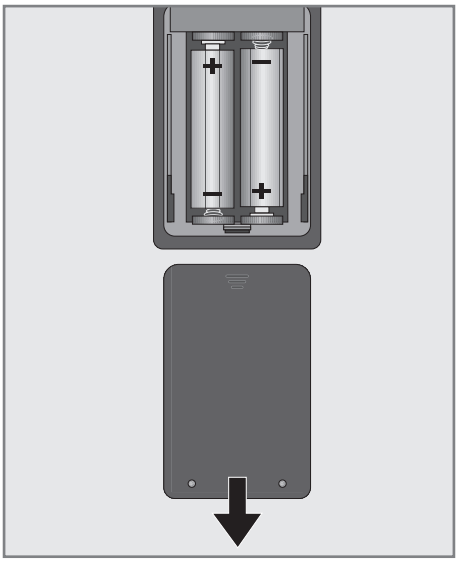

1 Open the battery compartment by removing the lid.

2 Insert the batteries (2 x 1.5 V micro; for example R03 or AAA). Observe the polarity (marked on the base of the battery compartment).

3 Close the battery compartment.

Note:

- If the television set no longer reacts properly to remote control commands, the batteries may be flat. Be sure to remove the exhausted batteries from the battery compartment.
- The manufacturer accepts no liability for damage resulting from used batteries.

Environmental note

-

This symbol on the battery or on the packaging indicates that the battery provided with this product shall not be treated as household waste. On certain batteries this symbol might be used in combination with a chemical symbol. The chemical symbols for mercury (Hg) or lead (Pb) are added if the battery contains more than 0.0005% mercury or 0.004% lead.

  Batteries, including those which contain no heavy metal, may not be disposed of with household waste. Please dispose of used batteries in an environmentally sound manner.

  Find out about the legal regulations which apply in your area.

Connections on the television set

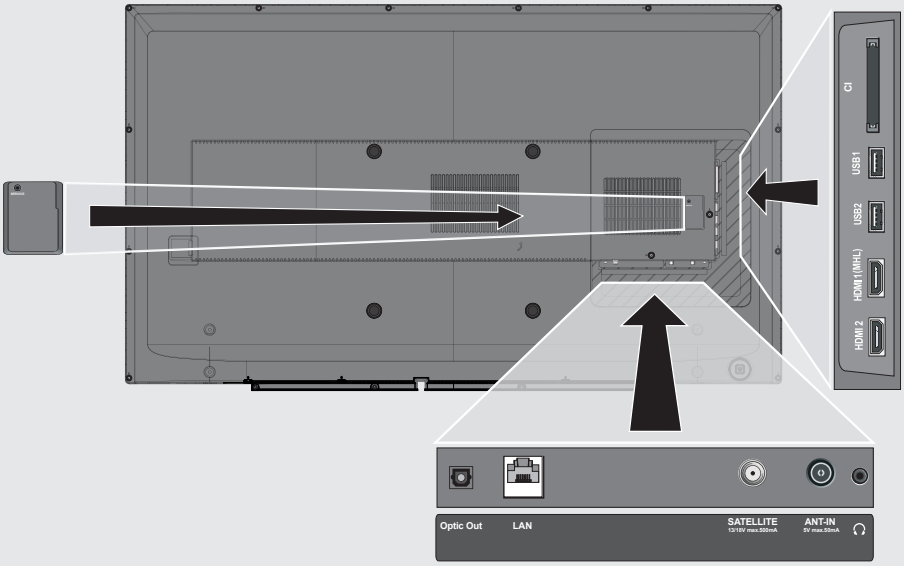

SERVICE	Service only.
Optic Out	Audio output sockets (optical) for PCM/Dolby Digital signals. It is for digital multichannel audio/video amplifier or AV receiver connections.
LAN	Network cable connection socket.
SATELLITE	Satellite antenna socket.
ANT IN	Antenna socket.
🎧	Headphone connection (3.5 mm jack); external audio output (with headphone-RCA converter).
CI	Common interface slot.
USB1	USB Harddisk socket for external data medium; connection for wireless keyboard, mouse.
USB2	USB Harddisk socket for external data medium; connection for wireless keyboard, mouse.
HDMI1 (MHL)	HDMI socket, audio/video signal input (HDMI).
HDMI2	HDMI socket, audio/video signal input (HDMI).

Control elements

Turning the TV to standby

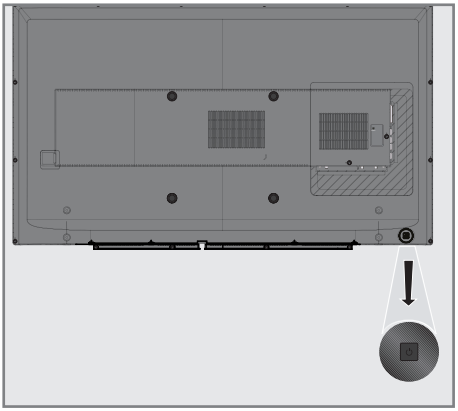

1 ⏻/I Switches the television on and back into standby mode.

Switches on from standby mode; selects channels directly

Selects the channel list (»ALL«, »FAV 1« to »FAV 4«)

Exits menu and applications

Displays information

Opens the menu

Opens the channel list

Opens the Tools menu

Adjusts the volume

Turns volume on/off (mute)

No function

Opens Screen share.

Turns on and off the television set (stand-by)

Switches between teletext and TV modes

Functions according to the screen help, HbbTV

Opens MyApps menu

Zapping function; switches the menus back one menu level

Opens the electronic TV guide

Signal source

Switches on from standby; selects stations step by step

Next/previous image/ chapter, next/previous track

Select subtitle

Opens Media Player menu

Select audio channel

Cursor Control

Moves the cursor up and down in the menus.

Moves the cursor left/right in menus.

Opens channel list; activates various functions.

Remote control - all functions

• (red) •• (green) ••• (yellow) •••• (blue)	Selects a page in teletext/HBB TV mode; selects/activates various functions in menus.
⏮	Switches to double character size in teletext mode; selects the previous track/previous picture in the Media Player.
⏭	Updates a page in teletext mode; selects the next track/next picture in the Media Player.
⏪	Page hold in teletext mode; starts the reverse picture search in the Media Player.
⏩	Show answers in teletext mode; starts the forward picture search in the Media Player.
●	No function.
▶	Starts playback in the external data media; Starts playback in the DLNA menu.
⏸	Pauses the file executed on the external data media; pauses the file executed on the DLNA menu.
■	Selects the split screen function in teletext mode; ends playback in the file browser; stops the file executed on the DLNA menu.
🗨	Selects different audio language (in digital TV operation).
🗨	Selects different subtitles (in digital TV operation).

Note:

- Your TV supports remote control feature for Apple iPhones, Windows mobile phones and Android phones.
  Depending on the features of your TV, you may control your TV by your phone after downloading the free »GRUNDIG TV Remote« application from Apple App. Store or Google Play (Android Market).

The television set is fitted with an “installation assistant”, which guides you step by step through the basic settings.

Using the screen dialogue, the user guide enables supposedly complex settings and data entries to be presented simply and clearly for everybody.
Pages and dialogue items appear on the screen, which identify the subsequent and likely operating steps.
To support this, you will also see the required button symbols of the remote control.

The basic settings in detail:
– language selection
– country selection;
– choice of user mode;
– location selection;
– accessories selection;
– network settings (if desired);
– Station settings (DVB-S, DVB-T, DVB-C and analogue channels).

The detailed settings can be found on pages 19 and 22.

Settings for connecting to the home network

Depending on the connection to the home network, you connect your television to the home network:
– via a LAN connection or
– without cable via WLAN

There are two options with the **LAN**-connection:

Automatic connection

all data regarding connection settings (»IP Address«, »Netmask«, »Gateway« and »DNS«) are obtained from modem automatically.

Manual connection

all data regarding connection settings (»IP Address«, »Netmask«, »Gateway« and »DNS«) must be configured manually.

There are various options when using **WLAN**:

Automatic connection

all data regarding connection settings (»IP Address«, »Netmask«, »Gateway« and »DNS«) are obtained from modem automatically.

Depending on the router, you can use the following options:
– Option “WPS-PBC” (Push Button Configuration);
– Connecting with a WPS PIN;
– Connecting by entering the network password.

Manual connection

all data regarding connection settings (»IP Address«, »Netmask«, »Gateway« and »DNS«) must be configured manually.

Tuning channels

Depending on the type of antenna connected, you can decide which channels you would like the television to search for.

DVB-S – Tunes digital channels from the satellite, from page 21.
You have two options for this search:
– the basic installation which presets a standard selection, e.g. the satellite Astra 19.2° East; you need only start the search;
– the professional installation, which allows you to make all required settings and set parameters for your receiver system.

DVB-C – For setting up digital cable channels see page 21.

DVB-T – For setting up digital terrestrial channels see page 22.

Searching for **Analog** television channels, see "Setting further channels" section on page 92 .

Note:

■ See “Setting further channels”" section starting from page 82 for more information on digital television channel settings.

Initial set-up – overview

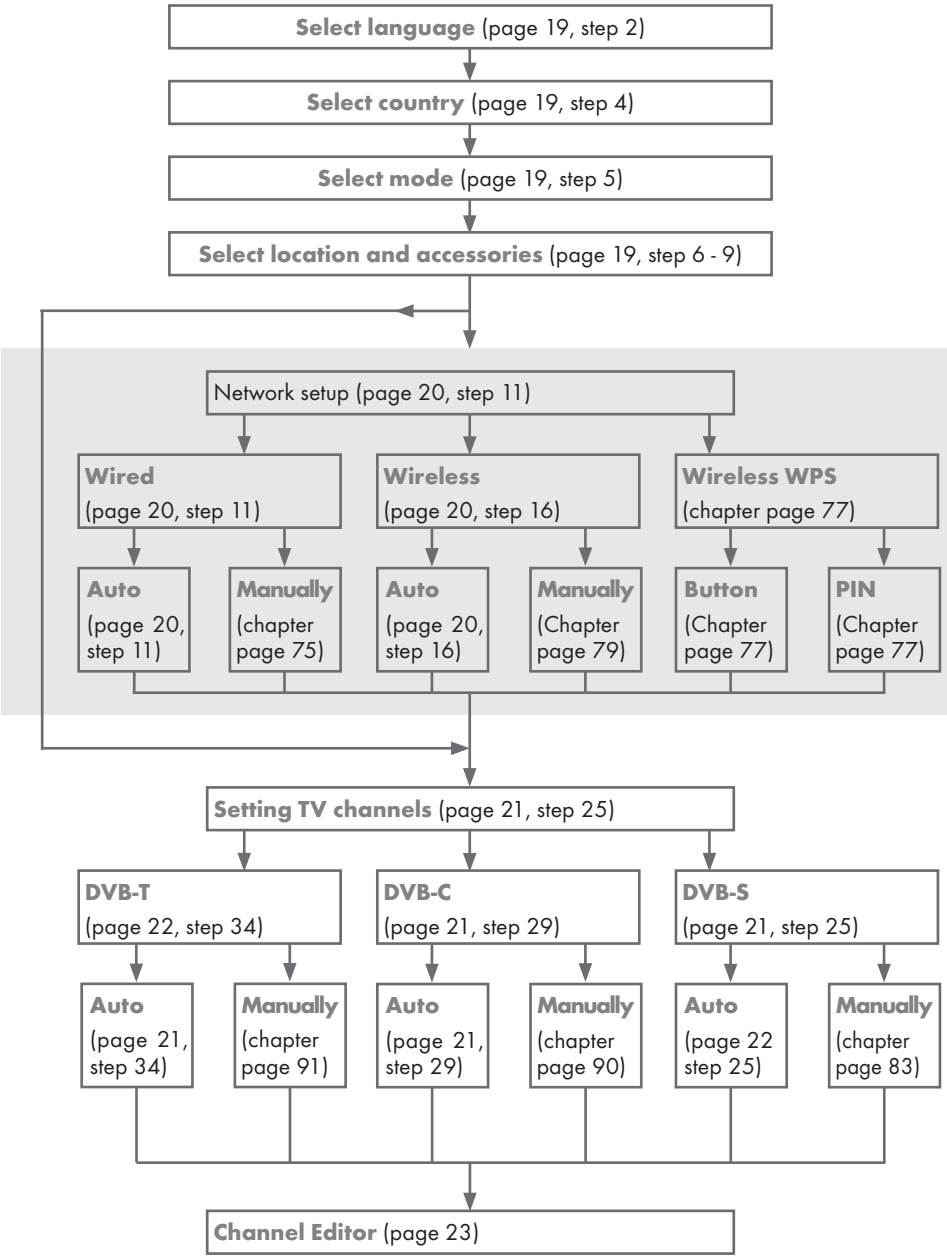

Arrange Initial set-up

1 Switch on the television set from standby with »⏻«, »**1...0**«, »**P+**« or »**P–**«.
– Menu Language menu appears when the device is switched on for the first time.

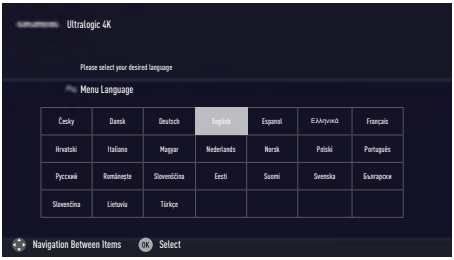

Help:

■ If the »Menu Language« menu does not appear on the screen, make the setting by following the instructions on returning the television to its factory settings on page 64.

2 Select the menu language with »<«, »>«, »∨« or »∧« and press »**OK**« to confirm.
– »Welcome« menu appears.

3 Step-by-step installation will be made to be able to use the television. Press »**OK**« to start the installation.

4 Select the country in which the television set is operated with »<«, »>«, »∨« or »∧« and press »**OK**« to confirm.
– »User Mode« menu appears, the option »Home Mode« is selected.

5 Confirm the option »Home Mode« with »**OK**«;

<u>or</u>

select the option »Enhanced« with »∨« or »∧« and press »**OK**« to confirm.
– »Home Mode« contains preconfigured TV settings that provide energy savings conforming EUP.
– »Enhanced« – if you will use the television for a demo presentation, increased image and volume settings are used in this mode. Increased mode consumes more energy.

6 Select the required option »Stand« or »Wall-mounted« with »∨« or »∧«.

Note:

■ The information how to place the television set is important for the automatic audio settings.

7 Confirm setting with »**OK**«.
– The »Summary« menu will be displayed.

8 Select the next operating step with »••••« (blue).
– The »Accessories« menu will be displayed.

9 If an accessory is used for the television and it has already been connected, carry out the required settings in this menu.
Select accessory with »∨« or »∧« and select setting with »<« or »>«.

10 Select the next operating step with »••••« (blue).

Note:

■ If you want to connect your television to the home network,
– continue at point **11** for an automatic LAN connection, or
– continue at point **16** for an automatic WLAN connection.

Note:

■ If connecting to a home network is not necessary, skip the setting using »••••« (blue). Continue settings at point. **25**, **29** or **34**.

Connecting to a home network with a LAN cable

11 Confirm »Change Connection Type« with »**OK**«.

12 Select the option »Wired« with »**V**« or »**Λ**« and press »**OK**« to confirm.

Note:

■ The settings for a manual LAN connection are on page 75.

13 Press »•« (red) to select »Connect« option to establish modem connection.
– »Connecting ... Please wait« message will be displayed, and if the connection is established »Connection To Gateway: Success« messages will be displayed.

14 Press »••« (green) to check the performed settings and also if the local network and internet connection has been established.
– »Testing ... Please wait« message will be displayed, and if the connection is established »Connection To Gateway: Success«, »Internet Connection: Success« messages will be displayed.

15 To switch to »Source« menu press »••••« (blue).

Note:

■ Continue searching for TV channels with:
– point **26** for DVB-S reception;
– point **30** for DVB-C reception;
– point **35** for DVB-T reception.

Connecting automatically by entering the network password

16 Confirm »Change Connection Type« with »**OK**«.

17 Select the option »Wireless« with »**V**« or »**Λ**« and press »**OK**« to confirm.

18 Confirm the message »Do you want to turn on Wi-Fi?« select »Yes« with »**<**« or »**>**« and press »**OK**« to confirm.

19 Select the line »Select Access Point« with »**V**« or »**Λ**« and press »**OK**« to confirm.
– »Select Access Point« menu appears and available wireless networks are scanned and displayed in the menu.

20 Select the network that you want to connect with »**V**« or »**Λ**« and press »**OK**« to confirm.
– Wireless connection password screen is displayed.

21 Select the required character with »**V**«, »**Λ**«, »**<**« or »**>**« and move to the next character with »**OK**«.
– Using »Shift« ➡ »**OK**«, you can switch between uppercase letters / numbers and lowercase letters / special characters.
– Select »Del« to delete the character entered and press »**OK**« to confirm.

22 Confirm the password with »••« (green).
– »Connecting ... Please wait« message will be displayed, and if the connection is established »Connection To Gateway: Success« messages will be displayed.

23 Press »••« (green) to check the performed settings and also if the local network and internet connection has been established.
– »Testing ... Please wait« message will be displayed, and if the connection is established »Connection To Gateway: Success«, »Internet Connection: Success« messages will be displayed.

24 To switch to »Source Setup« menu press »••••« (blue).

Note:

■ Continue searching for TV channels with:
– point **25** for DVB-S reception;
– point **29** for DVB-C reception;
– point **34** for DVB-T reception.

Searching television channels with satellite signal (DVB-S)

25 Select the option »Satellite (DVB-S/S2)« with »V« or »Λ« and press »OK« to confirm.
– The satellite Astra 19.2° East is preset.

26 Confirm the push button »Continue« with »••••« (blue).

Notes:

- Select the Channel Type.
  Press »V« or »Λ« to select whether you want to search for only digital channels (Digital) or only radio channels (Radio) or both (Digital + Radio) and press »OK« to select and mark or unmark the »Digital« and/or »Radio« items.
- Select Scan Mode.
  To select whether you want to search for only free digital television channels (Free), only scrambled digital television channels (Scrambled) or both (Free + Scrambled), press »V« or »Λ« and press »OK« to select and mark or unmark the »Free« and/or »Scrambled« items.

27 Press »•« (red) to start searching.
– »Digital Searching« menu appears and the scan for TV channels begins.
– The scan is complete as soon as the message »Search is completed!« appears.

28 Select the »Channel Editor« with »OK«.

Tuning cable digital television channels (DVB-C)

29 Select the option »Cable (DVB-C)« with »V« or »Λ« and press »OK« to confirm.

30 Select the line »Scan Type« with »V« or »Λ«.
Select the option »Quick« or »Full« with »<« or »>«.
– »Quick« scanning function sets the channels according to the cable operator information in the broadcasting signal.
– »Full« scan function scans the entire frequency range selected. With this search option, search can take a long time. This search type is recommended. Some cable providers do not support »Quick« scan.

Note:

- You can speed up the search. To do this, frequency and network ID information are required. You may get this data from your cable operator or find it in the Internet forums.

31 Confirm the push button »Continue« with »••••« (blue).

Note:

- Perform Channel Type selection. Press »V« or »Λ« to select whether you want to search for only digital channels (Digital), only Analog channels (Analog) or both (Digital + Analog) and press »OK« to select and mark or unmark the »Digital« and »Analog« items.

32 Press »•« (red) to start searching.
– The »Digital or Analog Searching« menu appears, and the search for TV channels begins.
– The scan is complete as soon as the »Search is completed!« appears.

33 Select the »Channel Editor« with »OK«.

Tuning terrestrial digital television channels (DVB-T)

34 Select the option »Air (DVB-T/T2)« with »**V**« or »**Λ**« and press »**OK**« to confirm.

Important:

- The antenna power supply (5V ⎓) may only be switched on if the antenna is an active indoor antenna with a signal amplifier and it is not already supplied with a voltage via a mains plug (or similar supply). Otherwise you may cause a short circuit and irreparably damage your antenna.

35 Select the line »Active Antenna Power« with »**V**« or »**Λ**«.
Switch on the antenna power supply for the antenna with »**<**« or »**>**« (»On«).

36 Select the line »Next Page« with »**V**« or »**Λ**« and press »**OK**« to confirm.

Note:

- Perform Channel Type selection. Press »**V**« or »**Λ**« to select whether you want to search for only digital channels (Digital), only Analog channels (Analog) or both (Digital + Analog) and press »**OK**« to select and mark or unmark the »Digital« and »Analog« items.

37 Press »•« (red) to start searching.
- The »Digital or Analog Searching« menu appears, and the search for TV channels begins.
- The scan is complete as soon as the »Search is completed!« appears.

38 Select the »Channel Editor« with »**OK**«.

Changing the Channel Editor for the digital channels

Channels found at the end of the search are stored in the »Channel Editor«.

You can delete channels which are not required from the programe table, you can change the order of channels within the programe table and lock individual channels (Parental control).

You can also add channels to the favourites list; in addition, you can change the order of channels within the favourites list.

In Channel Editor, press »**P+**« to switch the channel list to the next page, press »**P–**« to switch it back to the previous page.

To perform searching in the Channel Editor menu by Channel names, press »•« (red).

To use filters and tools in the Channel Editor menu, press »•••« (yellow).

Opening the Programme Table

1 Open the menu with »**MENU**«.

2 Select the »Settings« menu with »**V**«, »**Λ**«, »**<**« or »**>**« and press »**OK**« to confirm.

3 Select the option »Source« with »**>**« or »**<**« and press »**V**« to confirm.

4 Select the line »Channel Editor« with »**V**« and press »**OK**« to confirm.
– »Channel Editor« menu is displayed.

Important:

- Programme table and favourite lists are stored separately for all sources (satellite, cable and air).
- Programme table of the current source will be displayed when you select programme table.

Notes:

- A CI module and smart card is required to watch the channel if there is a »**CA**« sign next to the channel name in Programme Table.
- As the recorded data channels are not displayed in the channel list, number of channels displayed in the Channel list may be less than 6000

Searching channels by name in the Channel Editor

While arranging the channels in the Channel Editor, you can search and select the channel name by the first three characters.

1 In the »Channel Editor« menu, select the search mode by pressing »•« (red).

2 Select the first character of the channel name you want to search with »∨«, »∧«, »<« or »>« and press »**OK**« to confirm. Repeat the entry for the next characters.
– Channels found will be listed on the right side of the screen.

3 With »>« switch to result section, select the channel you are searching with »∨« or »∧«, and highlight this with »**OK**«.

Note:

■ To change the place of, delete or add the channels to favorites lists, continue reading the relevant section.

4 To return to the previous menu, press »**BACK** ←«.

5 To exit the »Channel Editor« menu, press »**EXIT**«.

Deleting channels in the Channel Editor

1 In the »Channel Editor« menu, select the channel(s) you want to delete with »∨«, »∧«, »<« or »>«, and highlight the channel by pressing »**OK**«.
– Channel is marked with »✔«.

2 Press »•••« (yellow).
– »Tools« menu is displayed.

3 Select the line »Delete« with »∨ « or »∧« and press »**OK**« to confirm.

4 To confirm deletion process, select the option »OK« with »<« or »>«;

<u>or</u>

to cancel deletion process, select the option »No« with »<« or »>« and press »**OK**« to confirm.

5 To exit the »Channel Editor« menu, press »**EXIT**«.

Moving the channels in the channel organizer to different channel positions

1 In the »Channel Editor« menu, select the channel(s) you want to move with »∨«, »∧«, »<« or »>«, and highlight the television channel by pressing »**OK**«.
– Channel is marked with »✔«.

2 Press »••« (green).

Notes:

■ In case of changing the order of the channels, channel numbers sent by the broadcaster will be changed.

■ If more than one channel is selected for moving, channels will be moved one after the other according to the selection order of channels.

3 Select the new place of the channel with »∨«, »∧«, »<« or »>« and press »**OK**« to confirm.

4 To exit the »Channel Editor« menu, press »**EXIT**«.

Displaying channels in the Channel Editor by antenna type

If you have more than one antenna type, you can display channels in the Channel Editor by antenna type.

1 To display the channels in the »Channel Editor« menu by antenna type, press »•••« (yellow).

2 Select the line »Antenna Type« with »∨ « or »∧« and press »**OK**« to confirm.

3 Select »Air«, »Cable« or »Satellite« with »∨« or »∧« and press »**OK**«.
– Television will switch to the antenna system you have selected and channels will be displayed.

4 To exit the »Channel Editor« menu, press »**EXIT**«.

Sequencing channels in the Channel Editor

You can sequence the channels in the Channel Editor according to different criteria such as TV, radio or scrambled / unscrambled.

1 To sequence the channels according to different criteria in the »Channel Editor« menu, press »•••« (yellow).

2 Select the sequencing criteria you want with »V« or »Λ« and press »OK« to confirm.
– Channels will be displayed in the »Channel Editor« menu by the criteria you have selected.

3 To exit the »Channel Editor« menu, press »EXIT«.

Creating a list of favourites

You can select your favourite channels and save them in up to four lists (FAV1 to FAV4).

Note:

- Favourite lists must be created separately for all sources (satellite, cable and air).
- After created the favourite list, press »FAV« to select the favorite list.

1 In the »Channel Editor« menu, select the channel(s) you want to add in the favorites list with »V«, »Λ«, »<«« or »>«, and highlight the television channel by pressing »OK«.
– Channel is marked with »✔«.

2 Press »•••« (yellow).
– »Tools« menu is displayed.

3 Select the line »Add to Fav.« with »V « or »Λ« and press »OK« to confirm.
–»Add to Fav.« menu is displayed.

4 Select the favorite list you want to add the selected channels with »V « or »Λ« and store with »OK«.
– The channels are marked in the Channel Editor with »❶«, »❷«, »❸« or »❹«.
– You can add the same channel in more than one favourites list.
– Each favourite list can contain maximum 255 channels.

Notes:

- You can delete channels from the favourites list.
  Press »•••« (yellow), select the favorites list the channel is in with »V« or »Λ« and press »OK« to confirm.
  Select the channel(s) you want to delete with »V«, »Λ«, »<«« or »>«, and highlight the channel by pressing »OK«.
  Press »•••« (yellow) and select the line »Remove from Fav.« with »V«, »Λ« and confirm with »OK«.
- When a channel stored in the favourite channel list is deleted channel order in the favourite list is updated.

5 To exit the »Channel Editor« menu, press »EXIT«.

Sorting channels in the favorites list

You can change the channel sorting in the favorites list.

1 To select favorites list in the »Channel Editor« press »•••« (yellow).

2 Select the favorites list you want to sort with »V« or »Λ« and press »OK« to confirm.

3 Select the channel(s) you want to move with »V«, »Λ«, »<«« or »>«, and highlight the television channel by pressing »OK«.
– Channel is marked with »✔«.

4 Press »••« (green).

Note:

- If more than one channel is selected for moving, channels will be moved one after the other according to the selection order of channels.

5 Select the new place of the channel with »V«, »Λ«, »<«« or »>« and press »OK« to confirm.

6 To exit the »Channel Editor« menu, press »EXIT«.

Enter own names for the favourites lists (max. 6 characters)

You can rename all favorites lists.

1 To recall favorites list menu when no menu is opened on the screen, press »**FAV**«.

2 Select the favorites list you want to rename with »**V**« or »**Λ**« and press »••••« (blue) button.
– Virtual keyboard will be displayed.

3 To delete the current name step by step, press »••« (red).

4 Select the required character/number with »**V**«, »**Λ**«, »**<**« or »**>**« and move to the next character with »**OK**«.
Repeat the same process for all characters/ numbers.

Note:

■ Using »**Shift**« ➡ »**OK**«, you can switch between uppercase letters / numbers and lowercase letters / special characters.

5 To save the new name with »••« (green).

6 Press »**EXIT**« to end the setting.

Renaming AV channels

You can rename AV channels according to the device you have connected. For example, for a PC which you have connected to HDMI1 source of TV with HDMI cable, you can name the source as PC.

1 Open »Input Source« menu with »➡▭«.

2 Select the AV source you will rename with »**<**« or »**>**« and press »••••« (blue).
– Rename menu is displayed.

3 Press »**OK**« and delete the "old" name step by step with »••« (red).

4 Select the required character/number with »**V**«, »**Λ**«, »**<**« or »**>**« and move to the next character with »**OK**«.
Repeat the same process for all characters/ numbers.

Note:

■ Using »Shift« ➡ »**OK**«, you can switch between uppercase letters / numbers and lowercase letters / special characters.

5 To save the new name with »••« (green).

6 Select the icon appropriate for the device type with »**<**« or »**>**« and press »**OK**« to confirm

7 To save the setting, press »••••« (blue).
– Source name and icon will change.

8 Press »**EXIT**« to end the setting.

Picture settings

1 Open the menu with »**MENU**«.

2 Select menu item »Settings« with »**V**«, »**Λ**«, »**<**« or »**>**« and press »**OK**« to confirm.

3 Select menu item »Picture« with »**<**« or »**>**« and press »**V**« to confirm.
– »Picture Settings« menu is active.

4 Select the required line »Picture Format«, »Picture Mode« or »Backlight« with »**V**« or »**Λ**« and press »**OK**« to confirm.
Select the option with »**<**« or »**>**«.
Press »**BACK ←**« to return to »Picture« menu.

Note:

- Other settings are available under »Advanced«.

5 Select the line »Advanced« with »**V**« or »**Λ**« and press »**OK**« to confirm.

6 Select the required line/function with »**V**« or »**Λ**« and press »**OK**« to confirm.
Select the value/option with »**<**« or »**>**« and press »**OK**« to confirm.
Press »**BACK ←**« to return to »Picture« menu.

7 Press »**EXIT**« to end the setting.

Advanced picture settings

The "advanced picture settings" are in principal digital image improvements which, however, should be only used when necessary when picture quality and transmission is excellent. They may well improve the display with poor material, but may adversely affect the display where transmission and picture quality are excellent.

- »Backlight« – Manual setting for back lighting (only active if dynamic back lighting is switched to "OFF"). This setting also directly impacts power consumption.
  »Dynamic Backlight« – Here the device optimally adjusts the back lighting for the picture content by regulating the back lighting depending on the average picture brightness. If a picture has predominately dark areas, then the black level displayed is improved by downward adjustment of the back lighting (in this case the display of the dark areas is improved), and with predominantly bright picture material the back lighting is maximised in order to display these areas more brightly.
- »Vibrant Colour« – Increases the colour contrast and the contrast adjustment. This setting is mostly too strong for use with normal pictures and should only be used where necessary (low or off) otherwise nuances in the image can be suppressed.
- »Gamma« – This setting establishes which brightness value should be displayed for which digital transmission value. Most recordings are transmitted with a gamma value of 2.2 (all Windows PCs and newer PCs with a MAC operating system work with this, older MAC systems and transmissions without colour profile mostly operate with a gamma value of 1.8).
- »Dynamic Contrast« – The function dynamically and optimally adjusts the contrast for the respective picture content by analysing images and then altering this depending in a change in contrast. This increase the contract, however may also reduce the visible brightness levels in the picture.

- »Perfect Clear« – Improves the general image by means of a gentle blue hue (giving the appearance of greater sharpness) and improves the black level by setting this entirely to black from specific shade of back. This reduces the visible grey values in the dark areas of the picture.
- »Film mode« detects and processes feature films automatically for all channel sources. This means you will always receive an optimal picture.
  This functions in the modi 480i, 576i and 1080i in TV playback and for other channel sources.
  If the »Film mode« is switched on for programmes without a feature film signal, minor problems such as picture freeze, defective subtitles or fine lines in the picture could occur.
- »Nois Reduction« – Reduces the visible snow by displaying the picture a little less sharply and creating a slight blurring. Should therefore be used minimally with good picture material.
- »Block Noise Reduction« – This function can only be selected with digital reception sources and AV presets. It reduces any interference from artefacts (pixel blocks) from digital programmes due to MPEG compression (such as from DVB-T receivers and lower transmission rates or DVD players).

Restore default settings

1 In the menu »Picture« select the line »Restore default display settings« with »V« or »Λ« and press »**OK**« to confirm.

2 Select push button »Yes« with »<« or »>« to confirm the security query;

   or

   select push button »No« with »<« or »>« to to cancel the function.

3 Press »**EXIT**« to end the setting.

Concluding the settings

1 Press »**EXIT**« to end the setting.

Sound settings

1 Open the menu with »**MENU**«.

2 Select menu item »Settings« with »**V**«, »**Λ**«, »**<**« or »**>**« and press »**OK**« to confirm.

3 Select menu item »Sound« with »**<**« or »**>**« and press »**V**« to confirm.
– »Sound« menu is active.

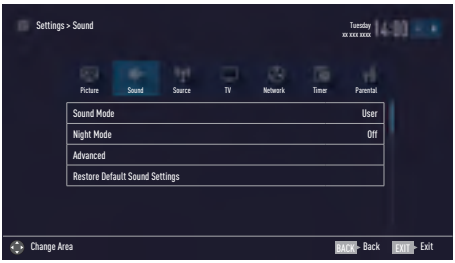

Note:

- Additional operations are explained in the following sections.

Sound Mode

1 Select the line »Sound Mode« with »**V**« or »**Λ**«.

2 Press »**<**« or »**>**« to select the desired option.

DTS Premium Sound™

DTS Premium Sound is an advanced surround sound solution suite that accurately extracts and places audio cues for an immersive surround experience over the TVs built-in speakers. To complete the audio experience, post processing and psychoacoustic techniques are implemented to provide 3D audio rendering to match video content, for bass and dialog enhancement and to deliver consistent and level volume across content.

DTS Premium Sound Technology is supported in Film, Natural, Speech and Music settings.

1 Select the line »Sound Mode« with »**V**« or »**Λ**«.

2 Select the option »Movie«, »Natural«, »Speech« or »Music« with »**<**« or »**>**«.

Night Mode

Night Mode prevents sound fluctuations and volume increases.

1 Select the line »Advanced« from the Sound menu with »**V**« or »**Λ**« and press »**OK**« to confirm.

2 Select the line »Night Mode« with »**V**« or »**Λ**«.

3 Activate (»On«) or deactivate the night mode by pressing »**<**« or »**>**«.

Notes:

- »Night Mode« appears in menu if »DTS« has been selected in »Sound Mode«.
- Other settings are available under »Advanced«. Select the line »Advanced« with »**V**« or »**Λ**« and press »**OK**« to confirm.

Location selection

The function how to place the television set is important for the automatic audio settings.

1 Select the line »Advanced« from the Sound menu with »**V**« or »**Λ**« and press »**OK**« to confirm.

2 Select the line »TV Location« with »**V**« or »**Λ**«.

3 Select the required option »Stand« or »Wall-mounted« with »**<**« or »**>**«.

For DTS patents, see http://patents.dts.com. Manufactured under license from DTS Licensing Limited. DTS, the Symbol, DTS and the Symbol together, and DTS Premium Sound are registered trademarks or trademarks of DTS, Inc. in the United States and/or other countries. © DTS, Inc. All Rights Reserved.

Stereo/dual channel

If the device receives two channel programmes, e.g. a film with the original sound on sound channel B (display: »Dual II«) and the dubbed version on sound channel A (display: »Dual I«), you can select the desired sound channel.

1 Select the line »Advanced« from the Sound menu with »V« or »Λ« and press »OK« to confirm.

2 Select the line »Sound Type« with »V« or »Λ« and adjust the setting with »<« or »>«.

Equalizer

Equalizer offers a sound setting that you can create.

Equaliser is active in the menu when »Sound Mode« is selected as »User«.

1 Select the line »Advanced« from the Sound menu with »V« or »Λ« and press »OK« to confirm.

2 Select the line »Equalizer« with »V« or »Λ« and press »OK« to confirm.
– »Equalizer« menu opens.

3 It is active in »120Hz« frequency band. Adjust the preferred value by using »<« or »>«.

4 Select the next frequency band with »V« or »Λ« to repeat the adjustment procedure.

5 To save adjustment, press »BACK ←«.

Automatic volume

The television channels broadcast at different volumes. The automatic volume limiting (AVL) function means the volume is kept the same when you switch between channels.

1 Select the line »Advanced« from the Sound menu with »V« or »Λ« and press »OK« to confirm.

2 Select the line »AVL« with »V« or »Λ« and then select »On« with »<« or »>«.

Note:

- AVL item is active in the menu when »Sound Mode« is selected as »User« or »Standard Mode«.

Restore default settings

1 In the menu »Sound« select the line »Restore Default Sound Settings« with »V« or »Λ« and press »OK« to confirm.

2 Select push button »Yes« with »<« or »>« to confirm the security query;

<u>or</u>

select push button »No« with »<« or »>« to to cancel the function.

3 Press »EXIT« to end the setting.

Concluding the settings

1 Press »EXIT« to end the setting.

TV OPERATION – BASIC FUNCTIONS

Switching on and off

1 Press »⏻«, »**1...0**« or »**P+**« or »**P-**« to switch on the television from standby mode.

2 Press »⏻« to switch the television to standby.

Selecting channels

1 Use »**1...0**« to select channels directly.

2 Select channels step by step with »**P+**« or »**P-**«.

3 Open the channel list by pressing »**OK**«, select the channel list by pressing »**<**« or »**>**« and confirm with »**OK**«, then close the channel list with »**EXIT**«.

Notes:

- Switch to radio channels by calling up the channel list with »**OK**«, press »••••« (blue), use »**∨**« or »**∧**« to select the option »Radio«. Select radio channels with »**<**« or »**>**« and confirm with »**OK**«.
- Switch back to TV channel lists by calling up the channel lists again with »**OK**« , press »••••« (blue), using »**∨**« or »**∧**« to select the option »Digital« and confirm with »**OK**«.
- To save energy, you can turn off the screen in "Radio mode" (see "ADVANCED SETTINGS" on page 70).

Selecting stations from lists

You can select stations from various lists, (e.g. ALL, FAV1 - FAV4).

1 Press »**FAV**« to recall the favorite list menu.
– »Favorite« menu is displayed.

2 Select the favorite list with »**∨**« or »**∧**« and open it with »**OK**«

3 Select the channel with »**<**« or »**>**« and press »**OK**« to confirm.

4 Press »**EXIT**« to exit the channel list.

Selecting AV channels

1 Open »Input Source« menu with »⇥«.

2 Select the desired AV channel position with »**<**« or »**>**« and confirm with »**OK**«.

3 Use »**1...0**« to switch back to the television channel.

Note:

- The AV preset descriptions can be changed. See "Settings" section on page 26.

Adjusting the volume

1 Adjust the volume with »**– ıll +**«.

Muting

1 Use »🔇« to switch the sound off (mute) and to switch it on again.

Displaying information

Information about each television program is shown automatically at every change of channel.

1 Display information, press »**?**« repeatedly.
– The display disappears automatically after a short while.

Audio language

You can select various languages when watching digital channels. This depends on the programme being broadcast.

1 Press »⊙« to open the selection menu.

2 Select the language with »∨« or »∧« and press »**OK**« to confirm.

3 Press »**EXIT**« to end the settings.

Subtitles

You can select various subtitles when watching digital channels. This depends on the programme being broadcast.

1 Press »⊟« to open the selection menu.

2 Select the language with »∨« or »∧« and press »**OK**« to confirm.

3 Press »**EXIT**« to end the settings.

Zap function

This function allows you to save the television channel which you are currently watching and switch to other channels (zapping).

1 Select the channel you want to save in the zap memory with »**1...0**« or »**P+**«, »**P-**« (for example, channel 1, BBC 1) and save with »**BACK** ←«.

2 Change channels with »**1...0**« or »∧« »∨«.

3 You can now use »**BACK** ←« to switch between the saved channel (in the example, BBC1) and the channel you were watching before.

4 Press »**EXIT**« to quit the zap function.

You can find the following settings in the »Tools« menu.

Sleep timer

In the »Sleep Timer« menu you can enter a time for the television to switch off. After this time has elapsed, the television switches to standby mode.

1 Open the Tools menu with »**TOOLS**«.

2 Select the line »Sleep Timer« with »**V**« or »**Λ**«.

3 Select the switch-off time with »**<**« or »**>**«.

Note:

- Set the function to »Off« with »**<**« or »**>**« to switch it off.

4 Press »**EXIT**« to end the settings.

Zoom function

With this function, you can enlarge the picture on the television.

1 Open the Tools menu with »**TOOLS**«.

2 Select the line »Zoom« with »**V**« or »**Λ**«.

3 Select zoom setting with »**<**« or »**>**« and press »**OK**« to confirm.
– Image is enlarged as center-focused.

4 To navigate in the enlarged picture, press »•« (red) and move the screen with »**<**«, »**>**«, »**V**« or »**Λ**«.

5 To return to the zoom menu, press »**BACK ←**«.

6 Press »**EXIT**« to end the settings.

Changing the picture format

The television automatically switches to the 16:9 format if this format is detected via the Euro-AV socket.

1 Open the Tools menu with »**TOOLS**«.

2 Select the line »Picture Format« with »**V**« or »**Λ**«.

3 Select the picture format with »**<**« or »**>**« and press »**OK**« to confirm.

4 Press »**EXIT**« to end the settings.

Notes:

- You can choose between the following picture formats.

»Auto« format

The picture format is automatically switched to »16:9« for 16:9 programmes.
The picture format is automatically switched to »4:3« for 4:3 programmes.

»16:9« and »14:9« formats

During programmes in 4:3 format, the picture is stretched horizontally if »16:9« or »14:9« is selected.
The picture geometry is stretched horizontally. With actual 16:9 signal sources (from a set-top box on the Euro-AV socket) the picture fills the screen completely and with the correct geometry.

»4:3« format

The picture is shown in 4:3 format.

»LetterBox« format

The letterbox setting is especially suitable for programmes in 16:9.
The black borders which are usually at the top and bottom of the screen are eliminated, 4:3 pictures fill the screen.
The transmitted pictures are enlarged, but are slightly cropped at the top and bottom. The picture geometry remains unchanged.

»Subtitle« format

If you cannot read the subtitles which appear on the bottom of the screen, then select »Subtitle«.

»Panorama« format

This setting is suited to films with a large width/ height ratio.
During programmes in 4:3 format the picture is stretched horizontally if the »Panorama« function is selected. The picture geometry is stretched horizontally.

»Overscan« format

When this mode is selected, high defined picture from HDMI and Component inputs is not cropped and it is displayed in its original size. This is only active in HDMI mode and for resolutions at or above 720p.

Audio settings

1 Open the Tools menu with »**TOOLS**«.

2 Select the line »Sound Preset« with »**∨**« or »**∧**«.

3 Select the audio setting by pressing »**<**« or »**>**«.
– You can change the »User« audio setting; see "Equalizer" on page 30.

4 Press »**EXIT**« to end the settings.

Picture settings

1 Open the Tools menu with »**TOOLS**«.

2 Select the line »Picture Mode« with »**∨**« or »**∧**«.

3 Select the picture setting by pressing »**<**« or »**>**«.

4 Press »**EXIT**« to end the settings.

ELECTRONIC TV GUIDE

The electronic programme guide offers an overview of all programmes that will be broadcast in the next week (for digital stations only).

1 Press »**GUIDE**« to start Electronic TV guide.
– A message is displayed.

Notes:

- Not all channels provide a detailed TV guide.
- Many broadcasters supply the daily programme but no detailed descriptions.
- There are broadcasters which do not provide any information at all.

2 Select the push button »Continue« with »**V**« and press »**OK**« to confirm.

– The programmes of the first 5 channels (in the order of the Channel Editor) are displayed.

3 Select the channel with »**V**« or »**Λ**«.
– Information about the actuel programme is displayed in the selected television channel.

Note:

- Press »**P+**« or »**P-**« to switch between the channels in increments of 5n.

4 Switch to the information about the current programme using »**OK**«.

Notes:

- To display a small image of the programme select the push button »Watch« with »**>**« and confirm with »**OK**«.
- The programme selected can be recorded (if an external data medium is connected). To do this select the push button »Record« with »**>**« and confirm with »**OK**«. Confirm the display with »**OK**«.
- To add the programme selected to the reminder timer select the push button »Set Reminder« with »**>**« and confirm with »**OK**«. Confirm the display with »**OK**«.

5 Return to the programme overview with »**BACK ←**«.

6 Press »**>**« to select information on the next programme and »**<**« to return to the information for the current programme.

Note:

- For additional options, refer to the user guide on the screen.

7 Press »**EXIT**« to close the channel guide.

Changing the font size of the channel guide

1 To switch to the overview, press »**<**«, then press »**V**« to select »Settings« and confirm with »**OK**«.

2 Select »Profiles« with »**V**« or »**Λ**« and confirm with »**OK**«.

3 Select »Accessibility« with »**V**« or »**Λ**« and press »**OK**« to confirm.

4 Select the required size with »**V**« or »**Λ**« and press »**OK**« to confirm.

5 Exit the setting by pressing »**BACK ←**« twice.

6 Return to the “programme overview” by pressing »**Λ**« to select »TV Listings« and press »**OK**« to confirm.

HBBTV MODE

What is HbbTV?

HbbTV provides next generation interactive teletext broadcast with its modern structure, content and high definition (HD) image and videos.

To receive HbbTV broadcast, your television must be connected to the Internet.

This feature is only available in countries where the service is provided.

After you switch to a TV station that offers HbbTV, a corresponding message appears.

Using HbbTV

When you switch to a TV program that supports HbbTV, an info message will appear stating that HbbTV broadcast is available.

1 Press »•« (red) to open HbbTV.
  – Information regarding the services will appear on the screen. Additionally, colored buttons necessary for browsing the menus will also appear.

Notes:

- The range of subjects and selection of individual subjects depend on the programme provider.
- Numeric buttons »**1**« through »**0**« are used for additional functions.

2 Press »•••« (green), »••••« (yellow) or »•••••« (blue) or »**V**«, »**Λ**«, »**<**« or »**>**« and confirm with »**OK**« to select the desired topic field.

3 Select the option you want with »**V**«, »**Λ**«, »**<**« or »**>**« in the selected topic field and confirm with »**OK**«.

4 Press »•« (red) to close HbbTV.

Note:

- If the navigation in HbbTV mode does not work, you can exit the function by pressing »**EXIT**«.

Additional functions for video indexes

1 Start playback with »▶«.

2 Pause playback with »❚❚«.

3 Resume playback with »▶«.

4 Rewind by »◀◀« forward by »▶▶«.

5 Stop playback with »■«.

Deactivate and activate HbbTV

This option allows turning off Hbb TV feature, thus warnings shall not be displayed on channels with Hbb TV feature.

1 Open the menu with »**MENU**«.

2 Select menu item »Settings« with »**V**«, »**Λ**«, »**<**« or »**>**« and press »**OK**« to confirm.

3 Select the menu item »Source« with »**>**« or »**<**« and press »**V**« to confirm.
  – »Source« menu is active.

4 Select the line »Advanced« with »**V**« or »**Λ**« and press »**OK**« to confirm.

5 Select the line »Hbb TV« with »**V**« or »**Λ**«.

6 Select the option »Off« with »**<**« or »**>**«.

Note:

- To activate HbbTV again, select in step. **6** the option »On«.

7 Press »**EXIT**« to end the setting.

Deactivate and activate digital teletext

If you deactivate digital video text, only normal video text can be selected, however the other functions of the interactive service HbbTV are still available.

1 Open the menu with »**MENU**«.

2 Select menu item »Settings« with »**V**«, »**Λ**«, »**<**« or »**>**« and press »**OK**« to confirm.

3 Select the menu item »Source« with »**>**« or »**<**« and press »**V**« to confirm.
  – »Source« menu is active.

4 Select the line »Advanced« with »**V**« or »**Λ**« and press »**OK**« to confirm.

5 Select the line »Digital Teletext« with »**V**« or »**Λ**«.

6 Select the option »Off« with »**<**« or »**>**«.

Note:

- To reactivate digital teletext, select »On« in step **6**.

7 Press »**EXIT**« to end the setting.

TOP text or FLOF text mode

Note:

- If you only want to use this "normal" video text, disable the digital video text, see page 37.

1 Press »**TXT**« to switch to the Teletext mode.

2 You can select teletext pages directly with »**1...0**« or step by step with »**∨**« or »**∧**«.
To return to page 100, press »**?**«.

Note:

- At the bottom of the screen, you will see an information line consisting of a red, green and, depending on the channel, yellow and blue text field. Your remote control has buttons with the corresponding colours.

3 Press »•« (red) to scroll one page back.

4 Press »••« (green) to scroll one page forward.

5 Press »•••« (yellow) to select section.

6 Press »••••« (blue) to select topic.

7 Press »**TXT**« to exit the Teletext mode.

Normal text mode

1 Press »**TXT**« to switch to the Teletext mode.

2 You can select teletext pages directly with »**1...0**«.
To return to page 100, press »**?**«.

3 Press »**P-**« to scroll one page back.

4 Press »**P+**« to scroll one page forward.

5 Press »**TXT**« to exit the Teletext mode.

Additional functions

Skipping the waiting time

While a page is being searched for, you can switch to the television channel.

1 Enter the teletext page number with »**1...0**« and then press »▶|«.
– As soon as the page is found, the page number is displayed.

2 Press »▶|« to switch to the teletext page.

Increasing character size

1 To enlarge the character size of a teletext page, press »|◀« repeatedly.

Page stop

A multiple page may contain several sub-pages, which are automatically scrolled by the transmitting station.

1 Stop the sub-pages with »◀◀«.

2 Press »◀◀« to quit the function.

Calling up a sub-page directly

If the selected teletext page contains further pages, the number of the current sub-page as well as the total number of pages is displayed.

1 Call up the sub-page with »▭«.

2 Press »•« (red) or »••« (green) to select a sub-page.

3 Press »▭« to quit the function.

Reveal answer

Certain teletext pages contain "hidden answers" or information which can be called up.

1 Display information with »▶▶«.

2 Conceal the information with »▶▶«.

Splitting the screen (Split Screen)

With this function you can see the television channel on the left and the teletext page on the right.

1 To activate the split screen function, press »■«.
– Television channel and teletext page appear side by side on the screen.

2 To deactivate the function, press »■«.

File formats for USB operating

Your television can be operated via the USB input with the following file formats:

Video data

Special codecs for video compression and decompression provide more memory space without compromising the picture quality excessively.

Your television plays video files in the formats XVID, H.264/MPEG-4 AVC (L4.1, 4 reference pictures), MPEG-4, MPEG-2, MPEG-1, MJPEG and MOV.

The following file name extensions are also supported: ".avi", "mkv", ".mp4", ".ts", ".mov", ".mpg", ".dat", ".vob",".divx". In addition to video data, these files also contain audio data compressed and "packaged" by using MP3, AAC or Dolby Digital.

Format (codec) information is embedded within the file content and may differ depending on the file extension. ".avi", ".mkv" or ".divx" files containing divx codec within are not playbacked.

Image data

Your television can display picture data in JPEG, PNG and BMP formats.

JPEG stands for Joint Picture Experts Group. This process is intended to compress picture files.

PNG and BMP standards are intended to compress picture data without loss.

Picture files can be saved in a data storage medium together with other file types.

Such files can be organized as folders and subfolders.

Audio data

Your television can play audio data coded with MP3, AAC standards.

MP3 stands for MPEG-1 Volume Level 3 and is based on the MPEG-1 standard developed by MPEG (Motion Picture Expert Group).

AAC indicates the Advanced Audio Coding and is developed by MPEG. AAC provides higher audio quality with the same data rate (bit rate).

WMA (Windows Media Audio) is a compression standard developed by Microsoft for audio data.

These formats enable audio files to be saved on storage devices with a sound quality similar to that of a CD.

File extensions supported by your device: ".mp3", ".mp2", ".wma", ".m4a", ".aac", ".wav"

MP3 files can be organised into folders and subfolders similar to the files on a computer.

For DTS patents, see http://patents.dts.com. Manufactured under license from DTS Licensing Limited. DTS, the Symbol, DTS and the Symbol together, and DTS Premium Sound are registered trademarks or trademarks of DTS, Inc. in the United States and/or other countries. © DTS, Inc. All Rights Reserved.

Connecting external data media

It is advised to put the television on stand-by mode with »⏻« before connecting the external data medium. Connect the device and then switch the television on again.

Before disconnecting the data medium, the television must first be switched to standby, otherwise files can be damaged.

Notes:

- Devices such as external hard disk and etc. that consume more power can only be connected to the **USB1** or **USB2** interface of the television.
- To get higher efficiency from your devices supporting USB 3.0 it is recommended to connect to **USB1** interface.
- If you are using a power cable for the external hard disk that you have connected to the **USB1** or **USB2** USB interface, then the power cable of the external hard disk must also be unplugged when the TV is turned off.
- You must not disconnect the USB Device from the TV while a file on the USB Device is being read by the TV.
- A bi-directional data transfer as defined for ITE (Information Technology Equipment) devices in EN 55022/EN 55024 is not possible.
- USB transfer is not an operating mode in itself. It is only an additional function.

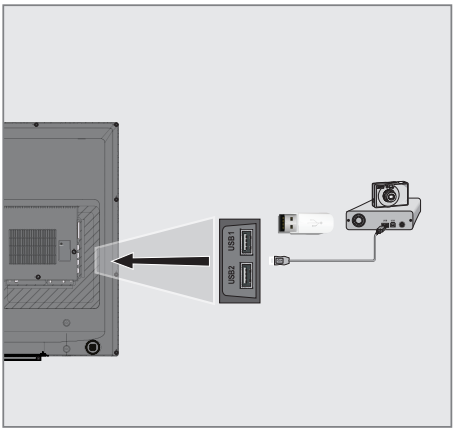

1 Connect the **USB1** or **USB2** USB interface on the television and the related data output on the external device (external hard disk, digital camera, card reader or MP3 player) with a USB cable;

Removing the external data media

Before removing the external data medium, log off the data medium.

1 Open the menu with »**MENU**«.

2 Select the menu item »Media Center« with »**V**«, »**Λ**«, »**<**« or »**>**« and press »**OK**« to confirm.
– »Media Player« menu is displayed.

3 Select the name of the data medium with »**V**« or »**Λ**« and press »**OK**« to confirm.

4 Select the »Media Options« with »**TOOLS**«.

5 Select the line »Disk Management« with »**V**« or »**Λ**« and press »**OK**« to confirm.

6 Select the line »Safely Remove Disk« with »**V**« or »**Λ**« and press »**OK**« to confirm.

7 Remove the data medium from the socket.

8 Press »**EXIT**« to end the setting.

The file browser

The file browser displays the video, audio and picture data that the external data medium provides.

If a data medium contains different file formats, you can deactivate data (Video file, Audio file, Picture file) you do not need for the playback using a filter function.

The main menu of the file browser

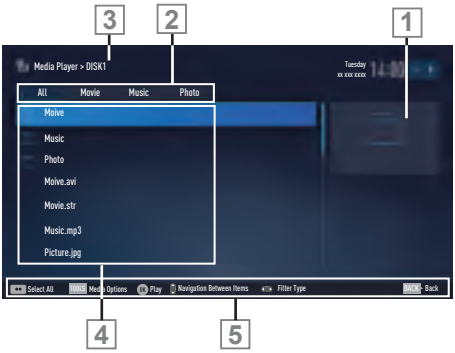

1 Preview.

2 Data type.

3 Name of the data medium.

4 Folders on the data medium.

5 Menu navigation.

Settings in the USB setup menu

Selecting the menu

1 Open the menu with »**MENU**«.

2 Select the menu item »Media Center« with »**V**«, »**Λ**«, »**<**« or »**>**« and press »**OK**« to confirm.

3 Select the name of the data medium with »**V**« or »**Λ**« and press »**OK**« to confirm.

4 Select the »Media Options« with »**TOOLS**«.

Note:

- Additional operations are explained in the following sections.

Selecting the display mode

1 Select the line »View Mode« with »**V**« or »**Λ**«.

2 Press »**<**« or »**>**« to select the function.

3 Press »**EXIT**« to end the setting.

Switching to automatic preview

If the automatic preview is switched on, you can see the selected file in the main menu of the file browser.

1 Select the line »Auto Preview« with »**V**« or »**Λ**«.

2 Press »**<**« or »**>**« to switch the function »On«.

3 Press »**EXIT**« to end the setting.

Selecting the display duration of the slide show

1 Select the line »Slide Show Interval« with »V« or »Λ«.

2 Select the time (3, 5, 10 seconds) with »<« or »>«.

3 Press »**EXIT**« to end the setting.

Subtitle settings

If the film has subtitles, you can turn on and off this subtitle, change its size or colour.

1 Use »V« or »Λ« to select »Subtitle Auto Selection«, »Subtitle Size« or »Subtitle Color«.

2 Adjust with »<« or »>«.

3 Press »**EXIT**« to end the setting.

Note:

- These adjustments can only be made for external subtitle files. These adjustments cannot be made in subtitles combined with the movie.

Playback basic functions

1 Open the menu with »**MENU**«.

2 Select the menu item »Media Center« with »V«, »Λ«, »<« or »>« and press »**OK**« to confirm.
– »Media Player« menu is displayed.

Note:

- If the content of the external data medium is not displayed, press »•••« (yellow) to refresh.

3 Select the name of the data medium »V« or »Λ« and press »**OK**« to confirm.
– Media Player menu of the selected external data medium is displayed.

4 Select the desired type (All, Movie, Music or Photo) with »<« or »>« and press »**OK**« to confirm.

5 Select the folder with »V« or »Λ« and press »**OK**« to open it.
– A list of sub-directories appears.

Note:

- Go back to the previous folder with »**BACK** ←«.

6 Select the track or picture with »V« or »Λ«, and press »▶« to start playing.

Notes:

- When playing picture data, press »**?**« to view information about the resolution and the size.
- For playing MP3 or WMA data, information on the album, track and singer is displayed at the left of the menu.
- When playing picture data, press »**?**« to switch on a control panel.

7 Press »❚❚« to pause playback.

8 To resume playback press »▶«.

9 Press »■« to end playback.
– The file browser appears.

Notes:

- It is possible that some files that are supported in USB mode do not operate due to some problems that may arise depending on how such files are created (compression) although they contain the supported file extension.
- If there are more then one audio sources (audio stream) in the video files that are being played, then you can switch between the audio sources with the »💬« while the file is played in full screen mode.
- Movies you will be watching from the movie file only supports subtitles with .srt, .sub, .ass, .ssa, .smi format. Names of the subtitle and movie files must be the same. Otherwise, subtitle can not be displayed.

Additional playback functions

Depending on the file formats used, the following additional functions are possible.

Selecting partition on HD files

(only supported video files)

1 During playback, select the next chapter with »>«.

2 During playback, select the previous chapter with »<«.

Selecting titles on HD files

(only supported video files)

1 During playback, select the next title with »∧«.

2 During playback, select the previous title with »∨«.

Playing selected tracks

Only play the marked tracks.

1 Select the track you want with »∨« or »∧« and highlight with »•••« (yellow).

2 Select the track you want with »∨« or »∧« and highlight with »•••« (yellow).

3 Start playback with »▶«.

4 Press »■« to end playback.

Note:

- To remove the highlighting, select the track with »∨« or »∧« and remove the marking with »•••« (yellow).

Selecting a track or picture in steps (SKIP)

1 During playback, select the next track/picture you want with »▶|«.

2 Select the previous track/picture with »|◀«.
  – Playback begins with the track or picture you selected.

Move to desired time

(only video files)

1 Press »**OK**« during playback.

2 Enter the time that you want to move to with »**1...0**« and confirm with »**OK**«.

Searching forward

(only video and audio files)

You can select different speeds (2-fold, 4-fold, 8-fold, 16-fold and 32-fold forwards and backwards).

1 During playback you can select playback speed by pressing »◀◀« or »▶▶«.

2 To resume playback press »▶«.

Turn the picture display

(only picture files)

The pictures can be rotated by 90°.

1 During playback, switch on the control panel with »**OK**«.

2 Use »<« or »>« to select »↔« and press »**OK**«.
– The picture rotates 90° clockwise.

Repeat functions

Options:
– »One«, the selected track is repeated once;
– »Sequence«, selected tracks are repeated consecutively;
– »Random«, selected tracks are repeated in a mixed order;
– »None«, repetition off.

1 Press »▶« to start playback.

2 During playback, switch on the control panel with »**OK**«.

3 Select »↻« with »<« or »>« and press »**OK**« repeatedly.
– The repeat function will change.

Changing the image for initial screen and radio screen saver

You can change the image for initial screen and radio screen saver.

1 In file browser menu, select the image you want to set with »∨« and »∧«, and press »•« (red).

2 Select »Initial Screen Image« to change the image for initial screen;

<u>or</u>

Select »Radio Screen Saver Image« to change the image for radio screen saver and press »**OK**« to confirm.

Notes:

- Selected image must be in JPG format with a resolution of 1920x1080 pixels and its file size must not be greater than 5Mb.
- To restore the images see section on Restore the Selected Images on page 64.

Playing the video, music and image files with home network connection

With DLNA menu of your television, you can easily access Video, music and photo files on server; and thanks to DMR feature, you can automatically start and stop media playing on devices with DMC feature.

Notes:

- You can share your video, music and image files through devices such as PC, mobile phone or NAS (Network Attached Storage) that function as DMS (Digital Media Server) compatible with DLNA.
- If the DMS device and the TV are connected to the wireless network at the same time, there may be lags and freezings during video playback.
- TV can also operate with DMS software that can be installed on a computer but, it is not guaranteed that it will run in full compatibility with software without a DMS certificate.
- Perform the following steps for a sample DMS setup.
  Open Windows Media Player11 on a PC with Windows operating system installed. In »Library« tab, select »Media Sharing«, tick on the »Share my media« box on the window that appears and then select »**OK**«. The new window displays the IP numbers of connected devices. To enable the TV to detect the computer, you need to select the television's IP number. If IP is not listed in the window; from »Media Sharing« menu's »Settings« option, you can select the option »Allow new devices and computers automatically« in the pop-up menu. After completing these processes, the television can only view the supported file formats in the Library.
  In order not to encounter any problems with media sharing, check the Firewall settings of your modem and computer.

Selecting the digital media server

1 Open the menu with »**MENU**«.

2 Select the menu item »Media Center« with »**>**« or »**<**« and press »**OK**« to confirm.
  – »Media Player« menu is displayed.

Note:

- If no DMS device appears, check the network connection. See page 73 or 76.

3 Select any DMS device with »**V**« or »**Λ**« and press »**OK**« to confirm.
  – DMS device content is displayed.

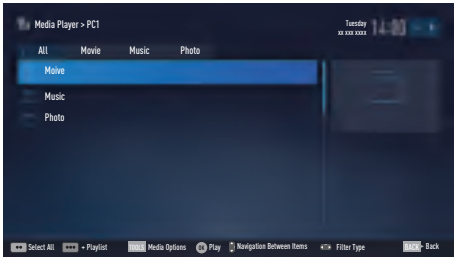

Notes:

- File and folder structure of the DMS device in menu may vary depending on the Digital Media Server software in use.
- Subtitles are not supported on video files that are played through the DMS device.
- Video files played through DMS device support following formats that have obtained DLNA certificate: »MPEG_PS_NTSC«, »MPEG_PS_PAL«, »MPEG_TS_SD_EU« and »MPEG_TS_EU_ISO«.
- In videos with high bit rate, lag problem might be seen.
- Folders that appear as unknown in DLNA application cannot be played by the TV. Installing the codec to your computer can solve this problem.

- Audio files played through DMS device support following formats that have obtained DLNA certificate: »AAC_ADTS_320«, »LPCM«, »MP3«, »WMABASE« and »WMAFULL«.
- Image files played through DMS device support following formats that have obtained DLNA certificate: »JPEG_LRG«, »JPEG_MED« and »JPEG_SM«.

Playback

1 Select the content folder on DMS device with »V« or »Λ« and press »**OK**«.
– All titles are displayed. to confirm.

2 Select the desired title with »V« or »Λ«.

3 Press »▶« to start playback.

Other playback options

1 Press »❚❚« to pause playback.

2 To resume playback press »▶«.

3 Press »|◀« or »▶|« until you reach the desired file.

4 Press »■« to stop playback.

5 Switch back to the content with »**BACK** ⬅«.

6 To exit DLNA feature press »**EXIT**«.

7 Select push button »Yes« with »<« or »>« to confirm the security query;

<u>or</u>

select push button »No« with »<« or »>« to cancel deletion process.

Note:

- Also, you can select following playing functions from the menu:
  - »◯« select repeat functions;
  - »|◀« select previous title;
  - »◀◀« picture searche previous;
  - »▶« starts playing;
  - »❚❚« pauses playing;
  - »■« stops playing;
  - »▶▶« picture searche next;
  - »▶|« select next title.

Terms & Conditions and Confidentiality

Agreements of Terms & Conditions and Confidentiality

Agreements of Terms & Conditions and Confidentiality are agreements you must accept to use all functions of Smart Inter@ctive.

If Agreements of Terms & Conditions and Confidentiality are accepted, all functions of Smart Inter@ctive can be used and the necessary data about the use of TV are collected.

If Agreements of Terms & Conditions and Confidentiality are not accepted, Application Portal, Software Update via Internet, Applications and Web Browser of Smart Inter@ctive cannot be accessed; no data about the use of TV are collected; DLNA and LiveShare functions can be used.

First run and operations

After you have turned the TV on, "Information" page will be displayed when the TV has connected to the internet for the first time. On this page, you will be informed that you need to read and accept the Terms & Conditions and Confidentiality content to use Smart Inter@active functions. Here, you must select "Next".

- If you exit this page (with the Exit button on the remote controller of by turning the TV off) without selecting "Next", the "Information Page" will be displayed again when the TV is turned on and connected to the internet the next time. The reason is that the Agreements of Terms & Conditions and Confidentiality have not been read and accepted.
- If you select Next, you will be directed to a page where you can read the Terms & Conditions and Confidentiality content.
- The user can see the content of Terms & Conditions and Confidentiality. There are two options for both contents: "Accept" and "Decline". You cannot accept or decline individually.
- If you select "Accept" you can continue to use the TV.
- If you select "Decline":
  - The "Information Page" will be displayed again when the TV is turned on and connected to the internet the next time and the same steps will apply.

If the content of the Terms & Conditions and Confidentiality has been updated, the "Information" page will be displayed when the TV has been turned on and connected to the internet for the first time after this update. On this page, you will be informed that the content of the Terms & Conditions and Confidentiality has been updated. Additionally, you will be expected to read and accept the content of the new Terms & Conditions and Confidentiality. Here, you need to select Next, and the next steps will be as mentioned above.

Displaying the Terms & Conditions and Confidentiality content accepted by the user and removing the acceptance

You can reread the Terms & Conditions and Confidentiality content you have already accepted and you can even remove your acceptance. To do this:

- Go to the Settings page of the Application Portal or to the Settings of the TV menu to access the Terms & Conditions and Confidentiality agreements you have accepted.
- Here, the most recent accepted versions of the Terms & Conditions and Confidentiality are displayed.
- You can read the latest version of the Terms & Conditions and Confidentiality content you have accepted and see "Remove Acceptance" option. If you select "Remove Acceptance":
  - The "Information Page" will be displayed again when the TV is turned on and connected to the internet the next time and the same steps will apply.

SMART inter@ctive TV 4.0 internet applications

SMART Inter@ctive TV 4.0 interactive applications provide your television with Internet services and pages.

These applications are designed according to your television.

With SMART Inter@ctive TV 4.0 feature, you can run many local and global internet applications. These applications include various types such as video, picture, music, game, social networking applications, news and sports applications, weather forecast applications.

Notes:

- Availability of SMART inter@ctive TV 4.0 inter@ctive applications may vary depending on the country.
- SMART inter@ctive TV 4.0 cannot download or save files permanently, cannot upload files to a website or cannot install add-ins except Login pages of some applications.
- Grundig is not responsible for the content and the quality of content offered by content providers.
- Local and global internet applications provided through your SMART Inter@ctive TV 4.0 come with your TV within the framework of special limited duration agreements entered into with the application owners. Application owners may update, modify, restrict or entirely remove those applications with their own decision. Grundig cannot be held responsible for such changes.
- Grundig reserves the right to make all changes such as modifications, restrictions, extensions, transfers and removals on internet applications provided through your SMART inter@ctive TV 4.0.
- In Login process of some applications, it may be required to connect to the web page of the related application. Subject web pages may contain links not related to Login process. When connecting those links, TV may access open web and view contents that are not supported by your TV. As you are on open web, your TV cannot control those unsupported contents or cannot be held responsible for them.

USB keyboard and mouse

You may connect a keyboard or mouse to both sockets **USB1**, **USB2** to use in the Web browser. Keyboards and mice requiring special drive are not supported

Getting Started with Smart Inter@ctive TV

1 Open the menu with »**MENU**«.

2 Select menu item »Applications Center« with »**<**« or »**>**« and press »**OK**« to confirm.
– »Application Portal« menu will be displayed.

Notes:

- If you press »@« when no menu is open, you can access »Application Portal« menu.
- If you attempt to start Inter@ctive applications without a cable or wireless adapter connected, the related warning is displayed on the screen. If your cable or wireless adapter is connected but you cannot receive IP or internet is not connected, the Inter@ctive applications cannot be started. In this case, check Network connection settings. See page 87 or 90.

Selecting internet applications

1 Select »Application Store« from the menu or press »@«.
  – Application Portal will be displayed.

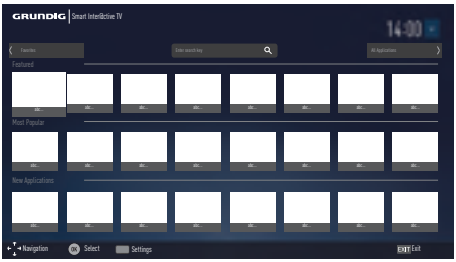

2 Select the required application with »V«, »Λ«, »<« and »>« and press »OK« to confirm.
  – Main menu of the application will be displayed after a short while.

Notes:

- When you attempt to start any application without a cable or wireless network connection, the related warning is displayed on the screen.
- Applications will not start if you do not have internet access or cannot obtain IP even if your cable is connected to TV or you are connected to a wireless network. In this case, check Network connection settings. See page 87 or 90.

Displaying all applications

Applications displayed on SMART inter@ctive TV 4.0 home page are just a few of the application that can run on the television. You can display and select other applications in »All Applications«.

1 Select »Application Store« from the menu or press »@«.
  – Application Portal will be displayed.

2 Select »All Applications« with »V«, »Λ«, »<« or »>« and press »OK« to confirm.
  – »All Applications« menu will be displayed.

Adding applications to favorites

You can add frequently used applications to your favorites and collect these under »Favorites«.

1 Use »V«, »Λ«, »<« or »>« to select the application you want to add to your favorites and press »FAV«.
  – The application you have selected will be added to your favorites.

Note:

- To remove an application from favorites, press »FAV«.

Application Portal Main Screen

1 Applications.
2 All Applications.
3 Favorites
4 Search bar.
5 Exit.

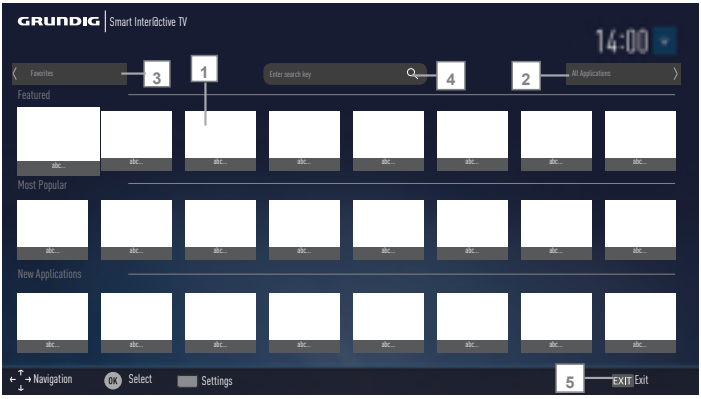

Navigation on the application portal main screen

1 On the application portal's home page, select the required application with »V«, »Λ«, »<« and »>« and press »OK« to confirm.
   – Main menu of the application will be displayed after a short while.

2 Usage of application mostly depends on application's own structure. Follow the notes on the screen.

Note:

- On the Settings menu, you can change the country of the application portal and make the applications of the selected country appear on »All Applications« page.

Web browser menu

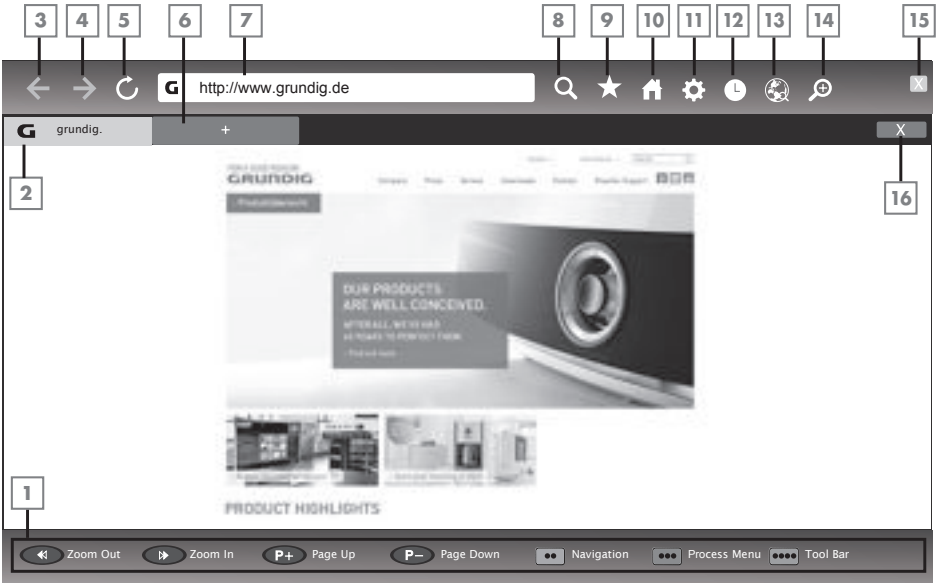

1 Menu controls.
2 Active tab.
3 Previous page.
4 Next page.
5 Refresh.
6 New tab.
7 Address bar.
8 Search in site.
9 Favorites.
10 Home page
11 Settings
12 History.
13 Search in Web.
14 Zoom.
15 Close Web browser.
16 Close tab.

Web browser applications

Web browser allows you to navigate in the Internet.

1 Open the menu with »**MENU**«.
2 Select the menu item »Web Browser« with »**V**«, »**Λ**«, »**<**« or »**>**« and press »**OK**« to confirm.
– Web Browser is displayed.
3 Select URL entry area with »**Λ**« or »**V**« and press »**OK**« to confirm.
– Virtual keyboard will be displayed.
4 Enter the address and confirm with »**OK**«.

Notes:

- Other functions are explained on the screen.
- You may connect a keyboard or mouse to sockets **USB1**, **USB2** to use in the Web browser. Keyboards requiring special driver are not supported.

1 Open the menu with »**MENU**«.

2 Select menu item »Settings« with »**V**«, »**Λ**«, »**<**« or »**>**« and press »**OK**« to confirm.

3 Select menu item »TV« with »**<**« or »**>**« and press »**V**« to confirm.
– »TV« menu is active.

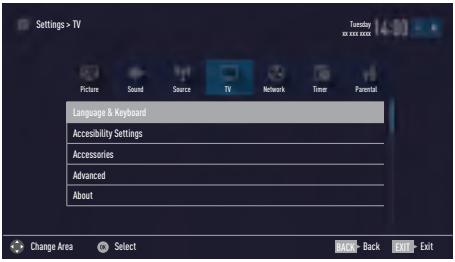

Note:

- Additional operations are explained in the following sections.

Changing the menu language

1 Select the line »Language & Keyboard« with »**V**« or »**Λ**« and press »**OK**« to confirm.

2 Select the line »Menu Language« with »**V**« or »**Λ**« and press »**OK**« to confirm.

3 Select menu language with »**V**« or »**Λ**« and press »**OK**« to confirm.

4 Press »**BACK** ⬅« to go back one menu level or press »**EXIT**« to end the setting.

Changing the audio language

(only for digital television channels)

You can define a primary and a secondary audio language.

1 Select the line »Language & Keyboard« with »**V**« or »**Λ**« and press »**OK**« to confirm.

2 Select the line »Audio Language« with »**V**« or »**Λ**« and press »**OK**« to confirm.

3 Select the audio language with »**V**« or »**Λ**« and press »•« (red) to set it as the primary audio language or »••« (green) to set it as the secondary audio language.
– Primary and secondary languages appear on the upper of the menu.

4 Press »**BACK** ⬅« to go back one menu level or press »**EXIT**« to end the setting.

Changing the subtitle language

(only for digital television channels)

You can disable subtitles, select subtitle language and assign a secondary subtitle language.

1 Select the line »Language & Keyboard« with »**V**« or »**Λ**« and press »**OK**« to confirm.

2 Select the line »Subtitle Language« with »**V**« or »**Λ**« and press »**OK**« to confirm.

3 Select the subtitle language with »**V**« or »**Λ**« and press »•« (red) to set it as the primary subtitle language or »••« (green) to set it as the secondary subtitle language.
– Primary and secondary languages appear on the upper of the menu.

4 Press »**BACK** ⬅« to go back one menu level or press »**EXIT**« to end the setting.

Changing the keyboard language

You can select the language of the keyboard connected to television.

1 Select the line »Language & Keyboard« with »**V**« or »**Λ**« and press »**OK**« to confirm.

2 Select the line »Keyboard Language« with »**V**« or »**Λ**« and press »**OK**« to confirm.

3 Select the keyboard language with »**V**« or »**Λ**« and press »**OK**« to confirm.

4 Press »**BACK** ⬅« to go back one menu level or press »**EXIT**« to end the setting.

1 Open the menu with »**MENU**«.

2 Select menu item »Settings« with »**V**«, »**Λ**«, »**<**« or »**>**« and press »**OK**« to confirm.

3 Select menu item »TV« with »**<**« or »**>**« and press »**V**« to confirm.
– »TV« menu is active.

4 Select the line »Accessibility Settings« with »**V**« or »**Λ**« and press »**OK**« to confirm.

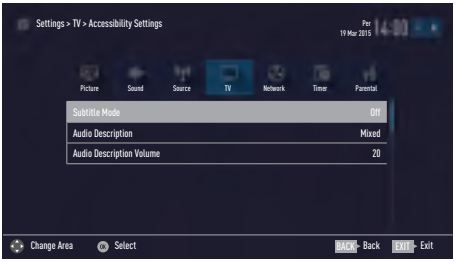

Note:

- Additional operations are explained in the following sections.

Subtitle Mode

(only for digital television channels)

Subtitles for the deaf and hard of hearing can be switched on and off.

1 From the »Accessibility Settings« menu use »**V**« or »**Λ**« to select the line »Subtitle Mode«.

2 Set the preferred option »Off«, »Hard of Hearing« or »Basic« with »**<**« or »**>**«.

3 Press »**BACK ←**« to go back one menu level or press »**EXIT**« to end the setting.

Audio description (audio subtitles)

Audio description is an additional audio channel for people who are visually handicapped. The activities, surroundings, scene changes or the appearance, the gestures and facial expressions of the actors are described.

This sound is transmitted at the same time as the normal sound with digital television stations. This depends on the programme being broadcast.

1 From the »Accessibility Settings« menu use »**V**« or »**Λ**« to select the line »Audio Description«.

2 Select »Mixed« or »Headphone« with »**<**« or »**>**«.

3 Select the line »Audio Description Volume« with »**V**« or »**Λ**« and use »**<**« or »**>**« to adjust volume.

4 Press »**BACK ←**« to go back one menu level or press »**EXIT**« to end the setting.

1 Open menu with »**MENU**« button.

2 Select menu item »Settings« with »**V**«, »**Λ**«, »**<**« or »**>**« and press »**OK**« to confirm.

3 Select menu item »TV« with »**<**« or »**>**« and press »**V**« to confirm.
– »TV« menu is active.

4 Select the line »Advanced« with »**V**« or »**Λ**« and press »**OK**« to confirm.

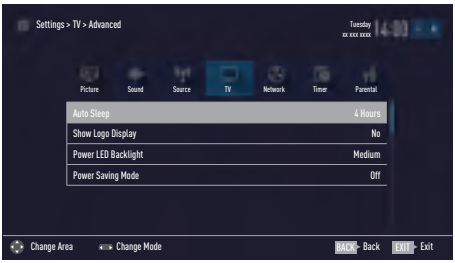

Note:

- Additional operations are explained in the following sections.

Auto sleep

This function will turn the television to stand-by mode in 4 hours depending on your setup, unless the television receives any signal, or keys or, according to European regulations, the remote remains untouched for 5 minutes.

1 From the »Advanced« menu use »**V**« or »**Λ**« to select the line »Auto Sleep«.

2 Select the switch-off time with »**<**« or »**>**«.

Note:

- Set the function to »Off« with »**<**« or »**>**« to switch off.

3 Press »**BACK ←**« to go back one menu level or press »**EXIT**« to end the setting.

Store logo view

This function is intended for feature introduction at stores. When »On« is selected, feature logos are displayed.

1 From the »Advanced« menu use »**V**« or »**Λ**« to select the line »Shop Logo Display«.

2 Select »Yes« with »**<**« or »**>**«.

Note:

- Set the function to »No« with »**<**« or »**>**« to switch off.

3 Press »**BACK ←**« to go back one menu level or press »**EXIT**« to end the setting.

Power LED brightness

You can adjust power (stand-by) LED brightness in operation mode of television.

1 From the »Advanced« menu use »**V**« or »**Λ**« to select the line »Power LED Brightness«.

2 Use »**<**« or »**>**« to set the brightness to »High«, »Medium« or »Low«.

3 Press »**BACK ←**« to go back one menu level or press »**EXIT**« to end the setting.

Power save mode

It ensures automatic shut off of screen in Antenna, Cable, Satellite and radio channels and USB mode when playing audio files.

1 From the »Advanced« menu use »∨« or »∧« to select the line »Power Saving Mode«.

2 Press »<« or »>« to set shut off time of display as »10 Seconds«, »30 Seconds«, »60 Seconds«.

3 Press »**BACK** ←« to go back one menu level or press »**EXIT**« to end the setting.

Note:

- If the screen closes while listening to music in USB mode, press »**MENU**« and select »Off« with »<« or »>« to close the feature.

Switching on/off weather information

If this function is activated, a weather logo and the local temperature is displayed.

1 From the »Advanced« menu use »∨« or »∧« to select the line »Weather Widget«.

2 Press »<« or »>« to turn to »On« position.

3 Press »**EXIT**« to end the setting.

Switching on/off help information

Help information about the relevant feature will be displayed if you select one of the options in the menu and wait for a while. This notification can be enabled or disabled.

1 Select »Help« in »Advanced« menu with »∨« or »∧«.

2 Press »<« or »>« to turn to »On« position.

3 Press »**EXIT**« to end the setting.

TIMER FUNCTIONS

1 Open menu with »**MENU**« button.

2 Select menu item »Settings« with »**V**«, »**Λ**«, »**<**« or »**>**« and press »**OK**« to confirm.

3 Select menu item »Timer« with »**<**« or »**>**« and press »**V**« to confirm.
– »Timer« menu is active.

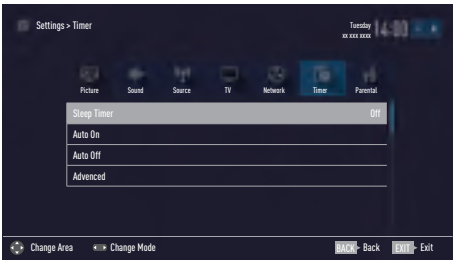

Note:

- Additional operations are explained in the following sections.

Sleep timer

In the »Sleep Timer« menu you can enter a time for the television to switch off. After this time has elapsed, the television switches to standby mode.

1 Select the line »Sleep Timer« with »**V**« or »**Λ**«.

2 Select the switch-off time with »**<**« or »**>**«.

Note:

- To switch off the function, use »**<**« or »**>**« to set the switch-off time to »Off«.

3 Press »**BACK ←**« to go back one menu level or press »**EXIT**« to end the setting.

On timer (Auto On)

In the On Timer menu, you can enter a switch-on time for the television.

The television switches on with the preset volume and the desired channel after the set time in stand-by mode has elapsed.

1 Select the line »Auto On« with »**V**« or »**Λ**« and press »**OK**« to confirm.

2 Select the line »Mode« with »**V**« or »**Λ**« and use »**<**« or »**>**« to select when the television should switch on.

3 Select the line »Input Source« with »**V**« or »**Λ**« and use »**<**« or »**>**« to select the input source.

4 Select the line »Service Type« with »**V**« or »**Λ**« and use »**<**« or »**>**« to select the preferred option (ATV, DTV or Radio).

5 Select the line »Channel« with »**V**« or »**Λ**« and use »**<**« or »**>**« to select the preferred channel.

Note:

- The line »Channel« is only active when the input signal currently in use has been set. If no entry has been made, then the first channel of the selected input source will be used.

6 Select the line »Volume« with »**V**« or »**Λ**« and use »**<**« or »**>**« to set the volume.

7 Select the line »Set Hour« with »**V**« or »**Λ**« and enter the time with »**1...0**«.

8 Press »••••« (blue) to save the setting.

9 Press »**BACK ←**« to go back one menu level or press »**EXIT**« to end the setting.

Off timer (Auto Off)

In the »Auto Off« menu, you can enter a switch-off time for the television. The television switches to stand-by after the entered time has elapsed.

1 Select the line »Auto Off« with »**V**« or »**Λ**« and press »**OK**« to confirm.

2 Select the line »Mode« with »**V**« or »**Λ**« and use »**<**« or »**>**« to select when the television should switch off.

3 Select the line »Set Hour« with »**V**« or »**Λ**« and enter the time with »**1...0**«.

4 Press »••••« (blue) to save the setting.

5 Press »**BACK ←**« to go back one menu level or press »**EXIT**« to end the setting.

PARENTAL SETTINGS

1 Open menu with »**MENU**« button.

2 Select menu item »Settings« with »**V**«, »**Λ**«, »**<**« or »**>**« and press »**OK**« to confirm.

3 Select the menu item »Parental« with »**>**« or »**<**« and press »**OK**« to confirm.
– »Parental« menu is displayed.

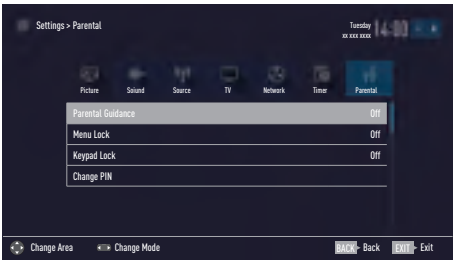

Note:

- Additional operations are explained in the following sections.

Parental Guidance

There are movies with content or scenes which are not suitable for children.

Certain programmes contain information which identifies such content or scenes and have been given an access level from 4 to 18. You can select one of the access levels and thus authorise the playback.

1 From the »Parental« menu use »**V**« or »**Λ**« to select the line »Parental Guidance« and press »**<**« or »**>**« to confirm.

2 Enter the PIN code »1234« with »**1...0**« in the password prompt.

3 Select the access level with »**<**« or »**>**«.

4 Press »**BACK ←**« to go back one menu level or press »**EXIT**« to end the setting.

Note:

- When the TV is in review buffer mode, the parental rating of the program in the live broadcast is applied on the content being watched (rather than the actual parental rating of the content being watched). As a result, a parental rated content being watched in the review buffer mode will not necessarily show as parental rated and vice versa. This means that if parental rated program starts in live broadcast the PIN-pop up message will appear in review buffer, or the PIN-pop up message will be dismissed in review buffer as soon as a program without parental rating starts in live broadcast."

Locking the menus

By using this function, you can lock »Automatic Channel Search«, »Manual Channel Search« and »Channel Editor« menus as to be accessed only when the PIN code is entered.

1 From the »Parental« menu use »**V**« or »**Λ**« to select the line »Menu Lock« and press »**<**« or »**>**« to confirm.

2 Enter the PIN code »1234« with »**1...0**« in the password prompt.

3 Activate the lock with »**<**« or »**>**« (»On«).

Note:

- To switch off the menu lock, use »**<**« or »**>**« to select the setting (»Off«).

4 Press »**BACK ←**« to go back one menu level or press »**EXIT**« to end the setting.

PARENTAL SETTINGS

Blocking the multifunction switch

When the key lock is activated, the multi function switch on the television does not function.

1 From the »Parental« menu use »∨« or »∧« to select the line »Keypad Lock« and press »<« or »>« to confirm.

2 Enter the PIN code »1234« with »**1...0**« in the password prompt.

3 Activate (On) or deactivate (Off) the panel lock with »<« or »>«.

4 Press »**BACK** ←« to go back one menu level or press »**EXIT**« to end the setting.

Changing the PIN code

Instead of the default code »1234«, you can enter a personal code.
Please take note of your personal code.

1 From the »Parental« menu use »∨« or »∧« to select the line »Change PIN« and press »**OK**« to confirm.

2 Enter the current PIN code »1234« with »**1...0**«.

3 Enter your new four-digit personal PIN code with »**1...0**«.

4 Reenter your personal PIN code with »**1...0**«.

5 Press »**BACK** ←« to go back one menu level or press »**EXIT**« to end the setting.

Blocking a television channel

You can block individual television channels which are not suitable for children using a personal PIN code.

1 Open menu with »**MENU**« button.

2 Select menu item »Settings« with »∨«, »∧«, »<« or »>« and press »**OK**« to confirm.

3 Select the menu item »Source« with »>« or »<« and press »**OK**« to confirm.

4 Select the line »Channel Editor« with »∨« or »∧« and press »**OK**« to confirm.

5 Select the channel to be blocked with »∨«, »∧«, »<« or »>« and highlight with »**OK**«.
–Channel is marked with »✔«.

6 Activade the »Tools« menu with »•••« (yellow).

7 Select the line »Channel Lock« with »∨« or »∧« and press »**OK**« to confirm.

8 Enter the PIN code »1234« with »**1...0**« in the password prompt.

9 Confirm the entry with »**OK**«.
–Channel is marked with »🔒«.

Note:

- To remove the lock, select the channel again with »∨«, »∧«, »<« or »>«, activade the »Tools« menu with »•••« (yellow), select the line »Unlock Channel« with »∨« or »∧« and press »**OK**« to confirm

10 Press »**EXIT**« to end the setting.

Watching a blocked television channel

You can watch a TV channel blocked with PIN code by selecting the TV channel and entering the PIN code.

1 Select the blocked channel with »**1...0**« or »**P+**«, »**P–**«.

2 Enter the PIN code »1234« with »**1...0**« in the password prompt.
– Blocked channel can be viewed.

Note:

- Channel will be blocked again when you change the channel.

Resetting PIN code

Use this function if you forget the PIN code.

1 From the »Parental« menu use »**V**« or »**Λ**« to select the line »Change PIN« and press »**OK**« to confirm.

2 Enter the PIN code »2 3 5 6« with »**1...0**«.

3 Enter your new four-digit personal PIN code with »**1...0**«.

4 Reenter your personal PIN code with »**1...0**«.

5 Press »**BACK ←**« to go back one menu level or press »**EXIT**« to end the setting.

DATE AND TIME SETTINGS

1 Open menu with »**MENU**« button.

2 Select menu item »Settings« with »**V**«, »**Λ**«, »**<**« or »**>**« and press »**OK**« to confirm.

3 Select the menu item »Timer« with »**>**« or »**<**« and press »**OK**« to confirm.
– »Timer« menu is displayed.

4 Select the line »Advanced« with »**V**« or »**Λ**« and press »**OK**« to confirm.

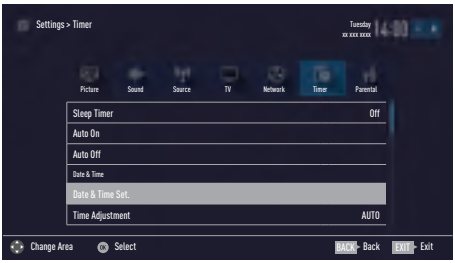

Note:

- Additional operations are explained in the following sections.

Auto tuning

The television automatically detects the local difference to Greenwich Mean Time (the selected channel provides a time signal).

1 From the »Advanced« menu use »**V**« or »**Λ**« to select the line »Date & Time Set.« and press »**OK**« to confirm.

2 Select the line »Mode« with »**V**« and then select the option »AUTO« with »**<**« or »**>**«.
– Date and time are automatically updated;

3 Press »**BACK ←**« to go back one menu level or press »**EXIT**« to end the setting.

Manual tuning

You can set the local time difference yourself if the time is not detected or is not the same as your local time.

1 From the »Advanced« menu use »**V**« or »**Λ**« to select the line »Time Adjustment«.

2 Select the option »Manual« with »**<**« or »**>**«.
– »Time Zone« and »Daylight Saving« are active.

3 Select the line »Time Zone« with »**V**« or »**Λ**« and press »**OK**« to confirm.
– The Time zone selection menu is displayed.

4 Adjust the time zone with »**V**« or »**Λ**« and press »**OK**« to confirm.

5 Select the line »Daylight Saving« with »**V**« or »**Λ**« and then select the option »AUTO«, »Off« or »On« with »**<**« or »**>**«.

6 Press »**BACK ←**« to go back one menu level or press »**EXIT**« to end the setting.

1 Open menu with »**MENU**« button.

2 Select menu item »Settings« with »∨«, »∧«, »<« or »>« and press »**OK**« to confirm.

3 Select the menu item »TV « with »>« or »<« and press »**OK**« to confirm.

4 Select the line »About« with »∨« or »∧« and press »**OK**« to confirm.

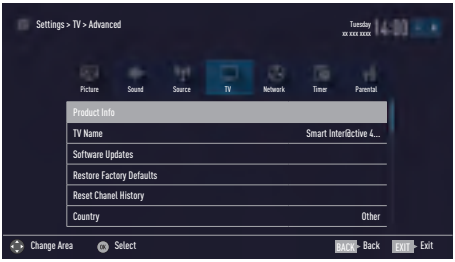

Note:

- Additional operations are explained in the following sections.

Product information

1 From the »About« menu use »∨« or »∧« to select the line »Product Info« and press »**OK**« to confirm.
  – Software version information of the product is displayed.

2 Press »**BACK** ←« to go back one menu level or press »**EXIT**« to end the setting.

Software update (OAD)

(only for digital television channels)

1 From the »About« menu use »∨« or »∧« to select the line »Software Updates« and press »**OK**« to confirm.

2 Select the option »OAD« with »∨« or »∧« and press »**OK**« to confirm.
  – The search for new software is being carried out.

Note:

- If no new software is available the menu automatically switches off.

3 If new software is available, press »•••« (green) to install the software.
  – The new software will be loaded.

Warning:

- Television will restart after update. Do not turn your television's power off during updates.

Note:

- For automatic checking of software update, select from »Source« menu ➡ »Advanced« the line »OAD« with »∨« or »∧«. Use »<« or »>« to select »On«.

Software update (Internet)

(only for digital television channels)

1 From the »About« menu use »∨« or »∧« to select the line »Software Updates« and press »**OK**« to confirm.

2 Select the option »Internet« with »∨« or »∧« and press »**OK**« to confirm.
  – The search for new software is being carried out.

Note:

- If no new software is available the menu automatically switches off.

3 If new software is available, press »•••« (green) to install the software.
  – The new software will be loaded.

Warning:

- Television will restart after update. Do not turn your television's power off during updates.

Software update (USB)

1 Plug the memory stick in one of the **USB** sockets at the side of the television.

2 From the »About« menu use »∨« or »∧« to select the line »Software Updates« and press »**OK**« to confirm.

3 Select the option »USB« with »∨« or »∧« and press »**OK**« to confirm.
  – The software on the USB memory stick is installed.

ACCESSORIES

You can connect various accessories to your television to use with video talk, volume control, motion control or a keyboard and mouse to use in your web browser. Display the status of the connected accessory from this menu to perform various adjustments.

1 Open menu with »**MENU**« button.

2 Select menu item »Settings« with »**V**«, »**Λ**«, »**<**« or »**>**« and press »**OK**« to confirm.

3 Select the menu item »TV « with »**>**« or »**<**« and press »**V**« to confirm.

4 Select the line »Accessories« with »**V**« or »**Λ**« and press »**OK**« to confirm.

5 Select the needful line with »**V**« or »**Λ**« and press »**OK**« to confirm.
Select the needful function with »**<**« or »**>**«.

6 Press »**BACK ←**« to go back one menu level or press »**EXIT**« to end the setting.

Notes:

- Accessories are sold individually. They are not provided with your TV. Please contact your dealer from where you have purchased your TV in order to obtain more information about purchasing.
- The displays for the status and the settings depend on the accessories used.

RESET FUNCTIONS

1 Open menu with »**MENU**« button.

2 Select menu item »Settings« with »**V**«, »**Λ**«, »**<**« or »**>**« and press »**OK**« to confirm.

3 Select the menu item »TV« with »**>**« or »**<**« and press »**OK**« to confirm.

4 Select the line »About« with »**V**« or »**Λ**« and press »**OK**« to confirm.

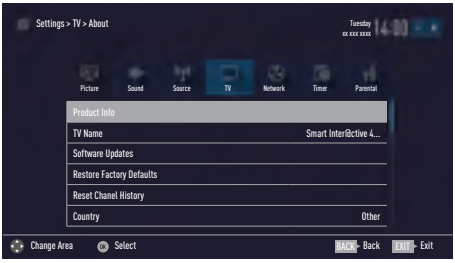

Note:

- Additional operations are explained in the following sections.

Resetting the television to its original state

This function enables you to delete the station lists and all custom settings.

1 From the »About« menu use »**V**« or »**Λ**« to select the line »Restore Factory Defaults« and press »**OK**« to confirm.
– Warning screen will be displayed.

2 Select push button »Yes« with »**<**« or »**>**« to confirm the security query;

<u>or</u>

select push button »No« with »**<**« or »**>**« to cancel deletion process.
– In a short while »Installation Guide« is displayed.

3 Continue the settings as described in the chapter on first installation and searching for channels on page 20.

Deleting channel history

This function allows you to delete channel history stored in the Main menu.

1 From the »About« menu use »**V**« or »**Λ**« to select the line »Reset Channel History« and press »**OK**« to confirm.
– Warning screen will be displayed.

2 Select push button »Yes« with »**<**« or »**>**« to confirm the security query;

<u>or</u>

select push button »No« with »**<**« or »**>**« to to cancel the function.

3 Press »**BACK ←**« to go back one menu level or press »**EXIT**« to end the setting.

Restoring selected images

This function allows for returning a modified image for initial screen and/or Radio screen saver to its factory settings.

1 Select »Restore Selected Image« in »About« menu with »**V**« or »**Λ**« and press »**OK**« to confirm.
– Warning screen will be displayed.

2 Select »Yes« to confirm the security question;

<u>or</u>

Select »No« to cancel and press »**OK**« to confirm.

DIGI LINK

Your television is equipped with DIGI LINK feature. This feature utilizes CEC (Consumer Electronics Control) protocol. CEC allows you to make an HDMI connection on sockets **HDMI** between your TV and DVD player, STB or video recorder and control such equipments with the remote control of the television.

This feature must also be supported by the device you will connect.

You television supports the following functions. For detailed information about this function, read user manual of the external device.

The Digi Link functions of the television

Turning on external device from standby mode

When you switch on your external device (e.g. DVD player) from standby mode, your television will be turned on from standby mode as well and it will switch to the HDMI source that the external device is connected to.

Depending on the features of the external device (e.g. AV receiver) can start and your television can stay on stand-by mode.

Selecting the HDMI source from the television

When you switch on your external device (e.g. DVD player), your television will switch to the HDMI source that the external device is connected to your TV should be open.

Selecting the menu language

When you select menu language on your TV, menu language of the external device will change as well (if your DVD player supports).

Switching off the external device from standby mode

After switching your television to standby, your external device (e.g. DVD player) will also switch to standby if it is switched on.

DIGI LINK is always active on your television.

Refer to the user manual of your external device to learn how to activate this feature on it.

Searching and selecting the active external device

You can connect up to 11 devices that support DIGILINK to this television.

1 Open the Tools menu with »**TOOLS**«.

2 Select the line »Digilink« with »**V**« or »**Λ**« and press »**OK**« to confirm.
   – Connected devices are searched and the ones that are found are displayed on the »Device List« menu.

3 Start device search with »••••« (blue).
   – The devices found are shown in the menu.

4 Select the device that you want to control with »**V**« or »**Λ**« and mark it with »**OK**«.
   – If the selected device is connected to a different source than the current one, you will automatically switch to the source to which the device is connected.

Device Control

You can determine how the remote control of your television will control the external device.

1 Press »⇥« and use »<« or »>« to select either one from »HDMI1« to »HDMI2« and press »**OK**« to confirm.

2 Open the menu with »**MENU**«.

3 Select menu item »Settings« with »∨«, »∧«, »<« or »>« and press »**OK**« to confirm.

4 Select the menu item »Source« with »>« or »<« and press »**OK**« to confirm.

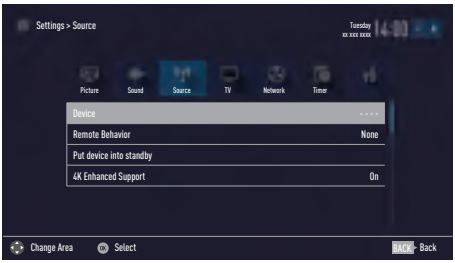

5 Select the line »Remote Behavior« with »∨« or »∧«.

6 Select control type (»Pass-Through«, »Deck« or »Zap«) with »<« or »>«.

Notes:

- »Pass-Through« is included in the menu as an option that can be selected in every device type. »Deck Control« and »Tuner Control« options change depending on the external device connected.
- Apply trial and error method to determine the functions of the remote control buttons for the selected control type.
- Refer to the user manual of the DIGILINK compatible device for its functions.

7 Press »**EXIT**« to end the setting.

Switching the device to standby

This option switches the connected external device to standby.

1 Press »⇥« and use »<« or »>« to select either one from »HDMI1« to »HDMI2« and press »**OK**« to confirm.

2 Open the menu with »**MENU**«.

3 Select menu item »Settings« with »∨«, »∧«, »<« or »>« and press »**OK**« to confirm.

4 Select the menu item »Source« with »>« or »<« and press »**OK**« to confirm.

5 Select the line »Put device into standby« with »∨« or »∧« and press »**OK**« to confirm.
  – The connected external device is switched off.

High definition

Your television can playback high-definition television signals (HDTV).

You can connect the input sources (HDTV set-top box or High Definition DVD player) to the **HDMI** socket (digital HDTV signal).

This ensures that you can view digital HDTV programmes, even if they are copy-protected (HDCP High Bandwidth Digital Content Protection).

Connection options

- Which television socket(s) you connect your external devices to depends on the sockets the external device is equipped with and the signals which are available.
- Note that with many external devices the resolution of the video signal must be adapted to the input sockets on the television (check the external device's instruction manual). You can find out which values you need to set by referring to the guidelines in the section about connection options.
- Do not connect any other equipment while the device is switched on. Switch off the other equipment as well before connecting it.
- Only plug the device into the mains socket after you have connected the external device.

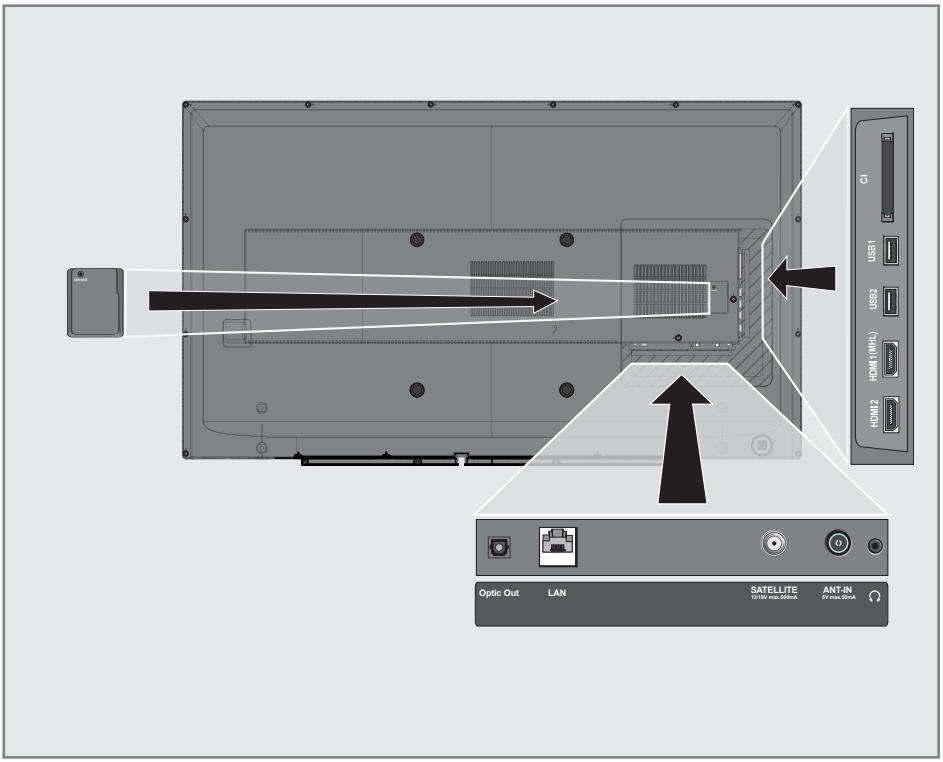

Connecting an external device

With a digital audio/video signal

- Suitable devices: Digital satellite receiver, game console, BluRay player, DVD player/ recorder, set-top box, notebook, PC.
- Video signal: digital image; definition: standard 576p; HDTV 720p, 1080i, 1080p.
- Audio signal: digital sound (stereo, multichannel compression, uncompressed).
- Channel position »HDMI1«, »HDMI2«.

1 Connect the **HDMI1 (MHL)**, **HDMI2**, socket on the television and the corresponding HDMI socket on the external device using a standard HDMI cable (digital video and audio signal).

Eliminating compatibility problem for Ultra HD (4K)

When connecting an older HDMI player (like a Blu-ray player, for example) to your TV, the sound may not be available. This is caused to a compatibility issue between the HDMI player and the TV due to different HDMI standards.

1 Press »**MENU**« to open the menu.

2 Select »Settings« using »V«, »Λ«, »<« or »>« and confirm with »**OK**«.

3 Select »Source« with »>« or »<« and confirm with »V«.
– The »Source« menu is active.

4 Select the line »Advanced 4K support« using »V« or »Λ«.

5 Switch off the »Advanced 4K support« function using »<« or »>« (»Off«).

Using a DVD recorder, DVD player, video recorder or set-top box

1 Switch on the video recorder, DVD player or set-top box and select the function you wish to use.

2 Press »⇥« and use »<« or »>« to select input signal (»HDMI1 (MHL)«, »HDMI2«) and press »**OK**« to confirm.

Headphones

Connecting headphones

1 Plug the headphone jack (3.5 mm ø jack plug) into the headphone socket of the television.

Selecting the volume for the headphones

1 Open the menu with »**MENU**«.

2 Select menu item »Settings« with »V«, »Λ«, »<« or »>« and press »**OK**« to confirm.

3 Select the menu item »Sound« with »>« or »<« and press »V« to confirm.

4 Select the line »Advanced« with »V« or »Λ« and press »**OK**« to confirm.

5 Select the line »Headphone Volume« with »V« or »Λ«.

6 Adjust the volume with »<« or »>«.

7 Press »**EXIT**« to end the setting.

Note:

- Prolonged listening at loud volumes with the earphones can damage your hearing.

Playing the audio signal via the HiFi system

1 Connect the socket 🎧 on the television and the corresponding socket on the hi-fi system / AV receiver using a adapter cable.

Note:

- When this function is activated, the hi-fi system / AV receiver (connected to socket 🎧) transmits the audio signal.

2 Open the menu with »**MENU**«.

3 Select menu item »Settings« with »**V**«, »**Λ**«, »**<**« or »**>**« and press »**OK**« to confirm.

4 Select the menu item »Sound« with »**>**« or »**<**« and press »**OK**« to confirm.
– »Sound« menu is displayed.

5 Select the line »Advanced« with »**V**« or »**Λ**« and press »**OK**« to confirm.

6 Select the line »Audio Out« with »**V**« or »**Λ**«.

7 Select the option »Fixed« or »Adjustable« with »**<**« or »**>**«.

Notes:

- If you select »Adjustable«, the volume can be changed in the menu option » Audio Out Volume«.
- If you want to obtain the audio output only from hi-fi system / AV receiver, select the option »Off« in the line »TV Speaker with »**<**« or »**>**«.

8 Press »**EXIT**« to end the setting.

Dolby, Dolby Audio, and the double-D symbol are trademarks of Dolby Laboratories.

Cable screen share (MHL)

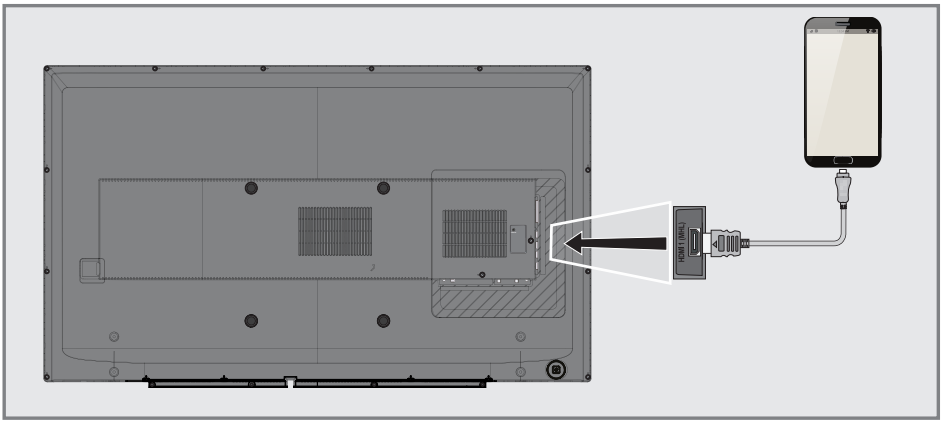

- Your television supports MHL connection (Mobile High Definition Connection) thanks to a MHL cable or MHL adapter.
- MHL connection allows you to share your mobile device screen with television by connecting your mobile device to television by a MHL cable.
- MHL can only be used from **HDMI1 (MHL)** socket and only with a mobile device that supports MHL feature.

Connecting a mobile device

1 Connect the **HDMI1 (MHL)** socket on your television with the corresponding socket of the mobile device by using an MHL cable or HDMI adapter.

Selecting the channel position for a mobile device

1 Press »⇥« and use »<« or »>« to select input signal »HDMI1«, then confirm with »**OK**«.
   – Screen image of your mobile device will be displayed on the television.

Note:

- To find out if your mobile device supports MHL connection or not, please visit the Website of the manufacturer.

Wireless screen share (Liveshare)

What is LIVESHARE?

- Miracast is a wireless technology that allows Android devices share images with each other. This technology is supported by your TV under the name Liveshare.

Screen share with Liveshare connection

1 Open the menu with »**MENU**«.

2 Use »**V**«, »**Λ**«, »**<**« or »**>**« to select »Screen Share« and press »**OK**« to confirm.
   – In addition to sharing images with the TV using devices, you can also share your screen with devices or another Grundig Smart TV depending on the mode and software version of your TV. In this case, select »Receive Screen« to share screen to you TV from another device, and select »Share Screen« to share screen to another device from your TV.

3 Using your laptop or mobile device, launch the Miracast application and select your TV.
   – Select »Receive Screen« and press »**OK**« to confirm. Using your laptop or mobile device, launch the Miracast application and select your TV.

   or

   – Select »Share Screen« and press »**OK**« to confirm. Miracast-supported devices on the network that can receive screen will be searched and the results will be listed. Select the desired device, select »Connect« and press »**OK**« to confirm.

4 Liveshare launched by selecting »Receive Screen«, can be ended by selecting Exit on the TV or disconnecting the device.

   or

   Liveshare launched by selecting »Share Screen« can be ended by selecting Disconnect in the Liveshare menu or exiting the Miracast application on the device.

Note

- Please visit the website of the manufacturer of your laptop/mobile device to see if it supports Miracast.

OPERATION WITH COMMON INTERFACE

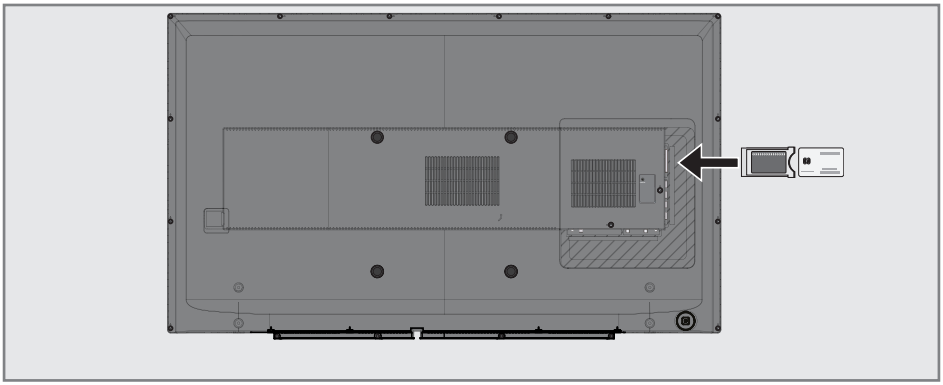

What is common interface?

- Common Interface (CI) is an interface for DVB receivers.
- Encrypted channels can only be viewed with a CA module suitable for the encryption system and the corresponding smart card.
- The television set is equipped with a Common Interface slot into which CA modules from various providers can be inserted.
- You can insert the provider's smart card into the CA module in order to enable the encrypted channels you want to see.

Inserting the CA module

Note:

- Switch off the device before inserting the CA module in the **CI** slot.

1 Insert the smart card into the CA module.

2 Insert the CA module with the smart card into the **CI** slot on the television.

Notes:

- To see which CA module is in the Common Interface slot, go to the »CA - Module« submenu.
- When you insert a CA module into the CI slot on the television for the first time, wait a few moments until the television has registered the CA module.

Access control for CA module and smart cards

1 Open the menu with »**MENU**«.

2 Select menu item »Settings« with »**V**«, »**Λ**«, »**<**« or »**>**« and press »**OK**« to confirm.

3 Select the menu item »Source« with »**>**« or »**<**« and press »**V**« to confirm.

4 Select the line »Advanced« with »**V**« or »**Λ**« and press »**OK**« to confirm.

5 Select the line »CA–Module« with »**V**« or »**Λ**« and press »**OK**« to confirm.

Notes:

- This menu provides operating instructions and – after you enter your PIN code – access to channels of the PAY-TV provider.
- The remaining settings are described in the manuals for your CA module and smart card.
- The CA modul is not supported in some countries and regions. Please consult your authorised dealer.

6 Press »**EXIT**« to end the setting.

NETWORK SETUP

To use the functions of SMART inter@ctive, you must connect the TV to your home network with internet access and log in.

You can launch various applications on Grundig My Apps Portal. These applications include various types such as video, picture, music, game, social networking applications, news and sports applications, weather forecast applications.

Your TV supports remote control feature for Apple iPhones and Android based phones. Depending on the features of your phone, you may control your TV by your phone after downloading the free »GRUNDIG TV Remote« application from Apple App Store or Google Play (Android Market)

Network connection

You can establish a wired or wireless connection between your television and the local network.

If you want to use a wired network connection, please start with the instructions here:

If you use a wireless network connection, please follow the instructions in the "Wireless network connection" section on page 76.

Note:

- The following section describes connecting to the home network if you did not carry this out during the “initial set-up”.

Wired network

Wired network connection

1 Connect the output of external modem to **LAN** socket with Cat 5 cable.

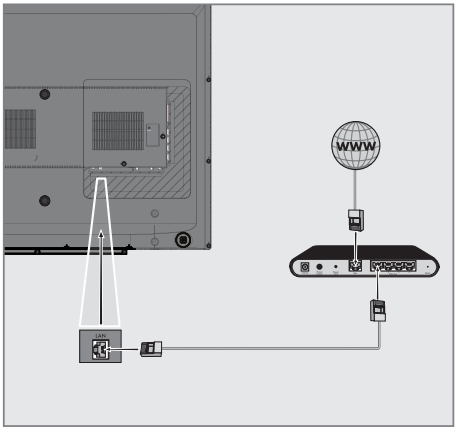

Note:

- Connection cables are not supplied.

Wired network settings

There are two ways of making the wired network settings.

A Automatic connection,
All data regarding connection settings (»IP Address«, »Netmask«, »Gateway« and »DNS«) are obtained from modem automatically.

B Manual connection,
all data regarding connection settings (»IP Address«, »Netmask«, »Gateway« and »DNS«) must be configured manually.

Automatic connection

Most of the home networks are Dynamic. If you have a dynamic network, you must use a DSL modem that supports DHCP. Modems and IP sharers that support DHCP obtain the »IP Address«, »Netmask«, »Gateway« and »DNS« values required for internet access automatically, and thus you are not required to enter those values manually.

1 Open the menu with »**MENU**«.

2 Select menu item »Settings« with »**V**«, »**Λ**«, »**<**« or »**>**« and press »**OK**« to confirm.

3 Select the menu item »Network« with »**>**« or »**<**« and press »**V**« to confirm.
– »Network« menu is active.

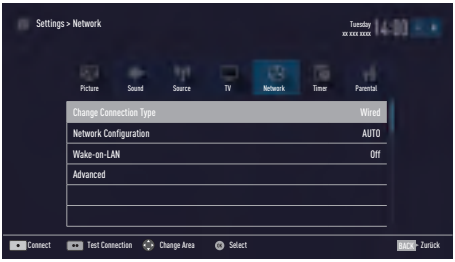

4 Select the line »Change Connection Type« »**V**« or »**Λ**« and press »**OK**« to confirm.

5 Select the option »Wired« with »**V**« or »**Λ**« and press »**OK**« to confirm.

6 Select the line »Network Configuration« with »**V**« or »**Λ**« and use »**<**« or »**>**« to select »AUTO«.

7 With »•« (red) select »Connect« to establish modem connection.
– »Connecting ... Please wait« message will be displayed, and if the connection is established »Connection To Gateway: Success« message will be displayed.

8 Press »••« (green) to check the performed settings and also if the local network and internet connection has been established.
– »Testing ... Please wait« message will be displayed, and if the connection is established »Connection To Gateway: Success«, »Internet Connection: Success« message will be displayed.

9 Press »**EXIT**« to end the settings.

Note:

■ If you do not have a dynamic network, follow the instructions in manual connection section.

Manual connection

Certain networks require Static IP address. If your network requires a Static IP address, you must enter the »IP Address«, »Netmask«, »Gateway« and »DNS« values manually. You can get »IP Adress«, »Netmask«, »Gateway« and »DNS« values (IPS) from your Internet Service Provider.

1 Open the menu with »**MENU**«.

2 Select menu item »Settings« with »**V**«, »**Λ**«, »**<**« or »**>**« and press »**OK**« to confirm.

3 Select the menu item »Network« with »**>**« or »**<**« and press »**V**« to confirm.
– »Network« menu is active.

4 Select the line »Change Connection Type« »**V**« or »**Λ**« and press »**OK**« to confirm.

5 Select the option »Wired« with »**V**« or »**Λ**« and press »**OK**« to confirm.

6 Select the line »Network Configuration« with »**V**« or »**Λ**« sand use »**<**« or »**>**« to select »Manual«.
– »IP Address«, »DNS«, »Netmask« and »Gateway« options are active.

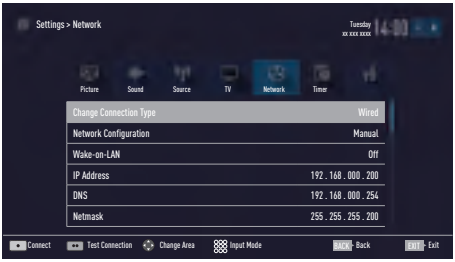

7 Select the line »IP Address« with »**V**«.
Enter IP address with »**1...0**«.

8 Select the line »DNS« with »**V**«.
Enter IP address with »**1...0**«.

9 Select the line »Netmask« with »**V**«
Enter Netmask address with »**1...0**«.

10 Select the line »Gateway« with »**V**«.
Enter Gateway address with »**1...0**«.

11 With »•« (red) select »Connect« option to establish modem connection.
– »Connecting... Please wait« message will be displayed, and if the connection is successful, Connection to Gateway: Successful« message will be displayed.

12 Press »•••« (green) to check the performed settings and also if the local network and internet connection has been established.
– »Testing ... Please wait« message will be displayed, and if the connection is established »Connection To Gateway: Success«, »Internet Connection: Successful« message will be displayed.

13 Press »**EXIT**« to end the settings.

Wireless network

Wireless network connection

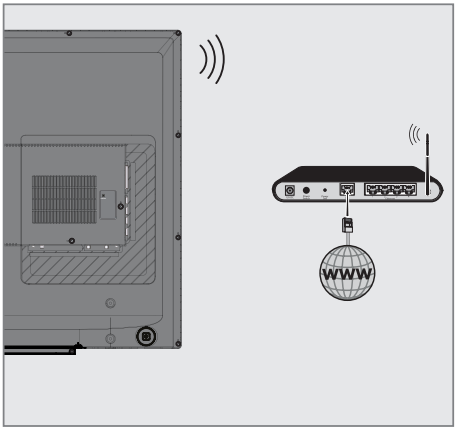

1 Television includes a built-in Wireless WiFi Adapter to connect it to wireless network.

Notes:

- Wireless LAN adapter supports IEEE 802.11B/G and N communication protocols. We recommend you to use IEEE 802.11N protocol to obtain the best performance in wireless HD video playback.
- If you use a modem that supports IEEE 802.11B/G, video playback performance may be poor when compared to a modem that supports IEEE 802.11N since the data transfer rate of IEEE 802.11B/G protocol is lower.
- Please note that video playback performance in a DLNA application on a wireless local network and in a SMART inter@ctive TV 4.0+ application on a network with internet connection depends on the number of users on the network as it is the case in every wireless network.
- It is recommended to switch off the equipment that are not in use in home network in order to avoid unnecessary network traffic.
- Placing the modem or wireless network sharer on an elevated location will increase the wireless connection reception strength.
- Wireless connection reception strength may vary depending on the type of the modem and the distance between the modem and television.

Wireless network settings

You have several ways to connect your TV to your home network.

A Automatic connection,
all data regarding connection settings (»IP Address«, »Netmask«, »Gateway« and »DNS«) are obtained from modem automatically.
Depending on the router, you can use the following options:
- Option “WPS-PBC” (Push Button Configuration);
- Connecting with a WPS PIN;
- Connecting by entering the network password.

B Manual connection,
all data regarding connection settings (»IP Address«, »Netmask«, »Gateway« and »DNS«) must be configured manually.

Technical requirements

Most of the home networks are Dynamic. If you have a dynamic network, you must use a DSL modem that supports DHCP. Modems and IP sharers that support DHCP obtain the »IP Address«, »Netmask«, »Gateway« and »DNS« values required for internet access automatically, and thus you are not required to enter those values manually.

Wireless WPS network connection through by pressing a button

1 Open the menu with »**MENU**«.

2 Select menu item »Settings« with »**V**«, »**Λ**«, »**<**« or »**>**« and press »**OK**« to confirm.

3 Select the menu item »Network« with »**>**« or »**<**« and press »**V**« to confirm.
– »Network« menu is active.

4 Select the line »Change Connection Type« with »**V**« or »**Λ**« and press »**OK**« to confirm.

5 Select the option »Wireless WPS« with »**V**« or »**Λ**« and press »**OK**« to confirm.
– WiFi warning message will be displayed.

6 Confirm the message »Do you want to turn on Wi-Fi?« select »Yes« with »**<**« or »**>**« and press »**OK**« to confirm.

7 Select the line »WPS Type« with »**V**« or »**Λ**« and select the option »Push Button« with »**<**« or »**>**«.

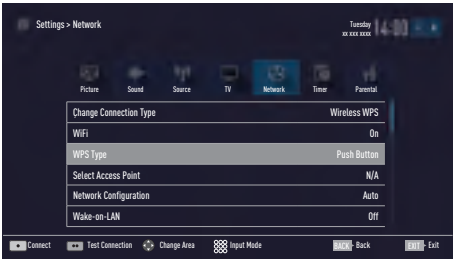

8 With »•« (red) select »Connect« to establish modem connection.
– »Push the WPS button on your Access Point« message is displayed.

9 Press the WPS button on the router.

10 To continue after pressing the WPS button on the access point, select the option »Continue« with »**<**« or »**>** «and press »**OK**« to confirm.
– The "Connection to Gateway: Success" message will be displayed.

11 Press »•••« (green) to make sure that the network connection is established with the current settings.
– »Testing ... Please wait« message will be displayed, and if the connection is established »Connection To Gateway: Success«, »Internet Connection: Success« messages will be displayed.

12 Press »**EXIT**« to end the setting.

Wireless WPS network connection with PIN

1 Open the menu with »**MENU**«.

2 Select menu item »Settings« with »**V**«, »**Λ**«, »**<**« or »**>**« and press »**OK**« to confirm.

3 Select the menu item »Network« with »**>**« or »**<**« and press »**V**« to confirm.
– »Network« menu is active.

4 Select the line »Change Connection Type« with »**V**« or »**Λ**« and press »**OK**« to confirm.

5 Select the option »Wireless WPS« with »**<**« or »**>**« and press »**OK**« to confirm.
– WiFi warning screen will be displayed.

6 Confirm the message »Do you want to turn on Wi-Fi?« select »Yes« with »**<**« or »**>**« and press »**OK**« to confirm.

7 Select the line »WPS Type« with »**V**« or »**Λ**« and select the option »PIN« with »**<**« or »**>**«.

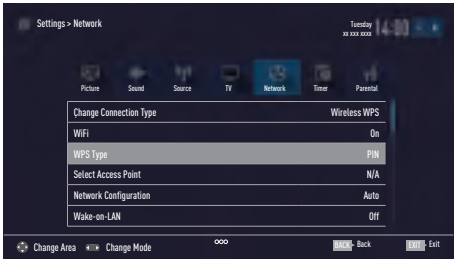

8 Select the line »Select Access Point« with »V« or »Λ« and press »OK« to confirm.
– Present WPS-supported wireless networks are scanned to display in the »Select Access Point« menu.

9 Select the network that you want to connect with »V« or, »Λ« and press »OK« to confirm.
– 8-digit pin code is displayed in the wireless WPS menu.

Note:

■ Refer to the manual of your router to find out how the PIN is entered via a PC.

10 Use a PC to enter the pin on the router (e.g. AVM FRITZ!Box: menu item WLAN Settings... WPS) and save.

Note:

■ The 8-digit PIN code must be entered in the modem interface in 2 minutes; otherwise, connection of television with the modem is cut.

11 Press »•••« (green) to confirm the registration.
– The message "Connection to Gateway: Success" appears.

12 Press »•••« (green) to check the performed settings and also if the local network and internet connection has been established.
– »Testing ... Please wait« message will be displayed, and if the connection is established »Connection To Gateway: Successfull«, »Internet Connection: Successfull« messages and MAC address will be displayed.

13 Press »EXIT« to end the setting.

Connecting automatically by entering the network password

Use this method for establishing a connection if your router does not support "WPS-PBC" or WPS PIN entry.

1 Open the menu with »MENU«.

2 Select menu item »Settings« with »V«, »Λ«, »<« or »>« and press »OK« to confirm.

3 Select the menu item »Network« with »>« or »<« and press »V« to confirm.
– »Network« menu is active.

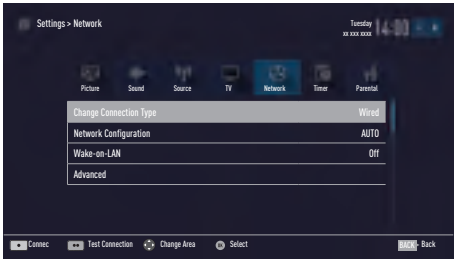

4 Select the line »Change Connection Type« with »V« or »Λ« and press »OK« to confirm.

5 Select the option »Wireless« with »V« or »Λ« and press »OK« to confirm.
– WiFi warning message will be displayed.

6 Confirm the message »Do you want to turn on Wi-Fi?« select »Yes« with »<« or »>« and press »OK« to confirm.

7 Select the line »Network Configuration« with »V« or »Λ« and select the option »AUTO« with »<« or »>«.

8 Select the line »Select Access Point« with »V« or »Λ« and press »OK« to confirm.
– »Select Access Point« menu is displayed by scanning available wireless networks.

9 Select the network that you want to connect with »V« or »Λ« and press »OK« to confirm.
– Wireless connection password screen is displayed.

Note:

- For device to discover the wireless modem on the network, the network name should support ASCII characters.

10 Select the required character with »**V**«, »**Λ**«, »**<**« or »**>**« and move to the next character with »**OK**«.
- Using »**Shift**« ➡ »**OK**«, you can switch between uppercase letters / numbers and lowercase letters / special characters.
- Select »**Del**« to delete the character entered and press »**OK**« to confirm.

11 Confirm the password with »••« (green).
- »Connecting ... Please wait« message will be displayed, and if the connection is established »Connection To Gateway: Success« messages will be displayed.

12 Press »••« (green) to check the performed settings and also if the local network and internet connection has been established.
- »Testing ... Please wait« message will be displayed, and if the connection is established »Connection To Gateway: Success«, »Internet Connection: Success« messages will be displayed.

13 Press »**EXIT**« to end the setting.

Note:

- If you do not have a dynamic network, follow the instructions in manual connection section.

Manual connection

Certain networks require Static IP address. If your network requires a Static IP address, you must enter the »IP Address«, »Netmask«, »Gateway« and »DNS« values manually. You can get »IP Address«, »Netmask«, »Gateway« and »DNS« values (IPS) from your Internet Service Provider.

1 Open the menu with »**MENU**«.

2 Select menu item »Settings« with »**V**«, »**Λ**«, »**<**« or »**>**« and press »**OK**« to confirm.

3 Select the menu item »Network« with »**>**« or »**<**« and press »**V**« to confirm.
- »Network« menu is active.

4 Select the line »Change Connection Type« with »**V**« or »**Λ**« and press »**OK**« to confirm.

5 Select the option »Wireless« with »**<**« or »**>**« and press »**OK**« to confirm.
- WiFi warning screen will be displayed.

6 Confirm the message »Do you want to turn on Wi-Fi?« select »Yes« with »**<**« or »**>**« and press »**OK**« to confirm.

7 Select the line »Network Configuration« with »**V**« or »**Λ**« and select the option »Manual« with »**<**« or »**>**«.
- »IP Address«, »DNS«, »Netmask« and »Gateway« options are active.

8 Select the line »IP Address« with »**V**«.
Enter IP address with »**1...0**«.

9 Select the line »DNS« with »**V**«.
Enter DNS address with »**1...0**«.

10 Select the line »Netmask« with »**V**«.
Enter Netmask address with »**1...0**«.

11 Select the line »Gateway« with »V«.
Enter Gateway address with »1...0«.

12 Select the line »Select Access Point« with »Λ« or »V« and press »OK« to confirm.
– »Select Access Point« menu is displayed by scanning available wireless networks.

13 Select the network that you want to connect with »V« or »Λ« and confirm with »OK«.
– Wireless connection password screen is displayed.

Note:

■ For device to discover the wireless modem on the network, the network name should support ASCII characters.

14 Select the required character with »V«, »Λ«, »<« or »>« and move to the next character with »OK«.
– Using »Shift« ➡ »OK«, you can switch between uppercase letters / numbers and lowercase letters / special characters.
– Select »Del« to delete the character entered and press »OK« to confirm.

15 Confirm the password with »•••« (green).
– »Connecting ... Please wait« message will be displayed, and if the connection is established »Connection To Gateway: Success« messages will be displayed.

16 Press »•••« (green) to check the performed settings and also if the local network and internet connection has been established.
– »Testing ... Please wait« message will be displayed, and if the connection is established »Connection To Gateway: Success«, »Internet Connection: Success« messages will be displayed.

17 Press »EXIT« to end the setting.

Change TV Name

To make it possible to identify your TV in the network, the name "Inter@ctive TV 4.0+" is assigned at the factory. You can change the name.

1 Open the menu with »MENU«.

2 Select menu item »Settings« with »V«, »Λ«, »<« or »>« and press »OK« to confirm.

3 Select the menu item »TV« with »V« or »Λ« and press »V« to confirm.
– »TV« menu is active.

4 Select the line »About« with »V« or »Λ« and press »OK« to confirm.

5 Select the line »TV Name« with »V« or »Λ« and press »OK« to confirm

6 Delete the current name step-by-step with »•« (red).

7 Select the required character with »V«, »Λ«, »<« or »>« and move to the next character with »OK«.
– Using »Shift« ➡ »OK«, you can switch between uppercase letters / numbers and lowercase letters / special characters.
– Select »Del« to delete the character entered and press »OK« to confirm.

8 Confirm the new name by pressing »•••« (green).

9 Press »EXIT« to end the setting.

Connecting the TV to a "hidden" network

Even if the SSID (Service Set Identifier) of the router is not visible, you can connect your TV to this network.

1 Open the menu with »**MENU**«.

2 Select menu item »Settings« with »**V**«, »**Λ**«, »**<**« or »**>**« and press »**OK**« to confrim.

3 Select the menu item »Network« with »**>**« or »**<**« and press »**V**« to confirm.
– »Network« menu is active.

4 Select the line »Select Access Point« with »**V**« or »**Λ**« and press »**OK**« to confirm.
– »Select Access Point« menu appears and available wireless networks are scanned and displayed in the menu.

5 Press »•« (red).
– »Add Network« menu appears.

6 Select the line »Access Point Name« with »**V**« or »**Λ**« and press »**OK**« to confirm.
– A menu for entering the SSID will be displayed.

Note:

- For device to discover the wireless modem on the network, the network name should support ASCII characters.

7 Select the required character with »**V**«, »**Λ**«, »**<**« or »**>**« and move to the next character with »**OK**«.
– Using »**Shift**« ➡ »**OK**«, you can switch between uppercase letters / numbers and lowercase letters / special characters.
– Select »**Del**« to delete the character entered and press »**OK**« to confirm.

8 Confirm the SSID by pressing »•••« (green).

9 Select the line »Security Type« with »**V**« or »**Λ**« and select the required option (WPA2) with »**<**« or »**>**«.

10 Confirm the setting with »•« (red).
– The network is now in the »Select Access Point« menu.

11 Select the network with »**V**« or »**Λ**« and press »**OK**« to confirm.
– Wireless connection password screen is displayed.

12 Select the required character with »**V**«, »**Λ**«, »**<**« or »**>**« and move to the next character with »**OK**«.
– Using »**Shift**« ➡ »**OK**«, you can switch between uppercase letters / numbers and lowercase letters / special characters.
– Select »**Del**« to delete the character entered and press »**OK**« to confirm.

13 Confirm the password by pressing »•••« (green).
– »Connecting ... Please wait« message will be displayed.

14 Press »•••« (green) to make sure that the network connection is established with the current settings.
– »Testing ... Please wait« message will be displayed, and if the connection is established »Connection To Gateway: Success«, »Internet Connection: Success« messages and MAC address will be displayed.

15 Press »**EXIT**« to end the setting.

Searching for all digital channels from a satellite automatically

New satellite channels are added or satellite data is changed frequently. Therefore, we recommend you to run auto search function from time to time.

All transponders are scanned for new channels.

1 Open the menu with »**MENU**«.

2 Select menu item »Settings« with »**V**«, »**Λ**«, »**<**« or »**>**« and press »**OK**« to confirm.

3 Select the menu item »Source« with »**>**« or »**<**« and press »**V**« to confirm.
– »Source« menu is active.

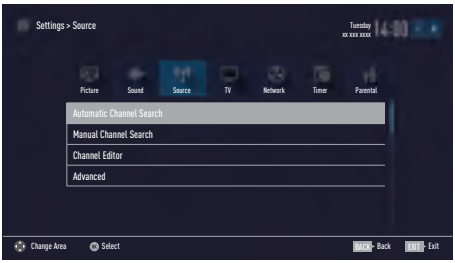

4 Select the line »Automatic Channel Search« with »**V**« or »**Λ**« and press »**OK**« to confirm.
– Menu is displayed.

5 Select the option »Satellite (DVB-S/S2)« with »**V**« or »**Λ**« and press »**OK**« to confirm.

6 Confirm the push button »Continue« with »••••« (blue).

7 Select the Channel Type.
Press »**V**« or »**Λ**« to select whether you want to search for only digital channels (Digital) or only radio channels (Radio) or both (Digital + Radio) and press »**OK**« to select and mark or unmark the »Digital« and/or »Radio« items.

8 Select Scan Mode.
To select whether you want to search for only free digital television channels (Free), only scrambled digital television channels (Scrambled) or both (Free + Scrambled), press »**V**« or »**Λ**« and press **OK**« to select and mark or unmark the »Free« and/or »Scrambled« items.

9 Press »•« (red) to start searching.

Notes:

- When updating via the same satellites a security query is displayed at the start of a search.
- If the previously stored channels should be retained in the channel list and the new channels found be added to it, then press »••« (green).
- If »•« (red) is pressed, the saved channels will be deleted from the current channel list.
  – The »Digital Searching« menu appears, and the scan for TV channels begins.
  – The search is complete as soon as the message »Search is completed!« appears.

Note:

- The search can be aborted with »**EXIT**«.

10 Switch to the Channel Editor with »•••« (yellow);

<u>or</u>

press »**EXIT**« to end the setting.

Searching for digital channels from a satellite manually on a transponder

If a certain channel cannot be found with automatic search, you can search it manually by manual search function. You must enter all parameters of the channel correctly. You can obtain the current transponder information from teletext page, satellite TV magazines or internet.

1 Open the menu with »**MENU**«.

2 Select menu item »Settings« with »**V**«, »**Λ**«, »**<**« or »**>**« and press »**OK**« to confirm.

3 Select the menu item »Source« with »**>**« or »**<**« and press »**V**« to confirm.
– »Source« menu is active.

4 Select the line »Manual Channel Search« with »**V**« or »**Λ**« and press »**OK**« to confirm.

5 Select the option »Satellite (DVB-S/S2)« with »**V**« or »**Λ**« and press »**OK**« to confirm.

6 Select the required option for manually adjusting with »**V**« or »**Λ**«:

Service Type
Press »**<**« or »**>**« to select whether you want to search for only television channels (DTV), only radio channels (Radio) or both (Radio+TV).

Scan Type
Press »**<**« or »**>**« to select whether you want to search for only free digital television channels (Free), only scrambled digital television channels (Scrambled) or both (Free + Scrambled).

Transponder
Enter the transponder frequency with »**1...0**« in five digits.

Symbol Rate
Enter the transponder symbol rate with »**1...0**« in five digits.

Polarization
Set the polarisation for the transponder to »Horizontal« or »Vertical« using »**<**« or »**>**«.

Network Search
Select the network search with »**<**« or »**>**« as »On« or »Off«.

7 Press »•« (red) to start searching.
– The »Digital Searching« menu appears, and the scan for TV channels begins.
– All channels found on the transponder are shown. The new channels will be added to the bottom of the channel table.

Note:
■ The search can be aborted with »**EXIT**«.

8 Press »**EXIT**« to end the setting.

Antenna settings and searching for digital channels from a satellite automatically

Note:

- The following description about the LNB settings premise a substantial expertise about the satellite systems. Ask your specialist dealer.

1 Open the menu with »**MENU**«.

2 Select menu item »Settings« with »**V**«, »**Λ**«, »**<**« or »**>**« and press »**OK**« to confirm.

3 Select the menu item »Source« with »**>**« or »**<**« and press »**V**« to confirm.
– »Source« menu is active.

4 Select the line »Automatic Channel Search« with »**V**« or »**Λ**« and press »**OK**« to confirm.

5 Select the option »Satellite (DVB-S/S2)« with »**V**« or »**Λ**« and press »**OK**« to confirm.

6 Select the line »Antenna Settings« with »**V**« or »**Λ**« and press »**OK**« to confirm.
– The »Antenna Settings« menu is displayed.

7 Select and set the required option for the antenna settings with »**V**« or »**Λ**«:

Satellite
Press »**OK**« then select the required satellite with »**V**« or »**Λ**« and press »**OK**« to confirm.

LNB Type
Press »**OK**« then select the required LNB Type with »**<**« or »**>**«, enter the required data and confirm with »••« (green).

LNB Power
Set the LNB power to »Off«, »13/18V« or »14/19V« depending on the LNB type by using »**<**« or »**>**«.

LNB selection
Only necessary for »DiSEqC 1.0« or »DiSEqC 1.1«, see chapter "Searching for antenna settings for DiSEqC 1.0/1.1 and digital channels from a satellite automatically".

8 Exit the antenna settings with »••••« (blue).

9 Select the Channel Type.
Press »**V**« or »**Λ**« to select whether you want to search for only digital channels (Digital) or only radio channels (Radio) or both (Digital + Radio) and press »**OK**« to select and mark or unmark the »Digital« and/or »Radio« items.

10 Select Scan Mode.
To select whether you want to search for only free digital television channels (Free), only scrambled digital television channels (Scrambled) or both (Free + Scrambled), press »**V**« or »**Λ**« and press **OK**« to select and mark or unmark the »Free« and/or »Scrambled« items.

11 Press »•« (red) to start searching.

Notes:

- When updating via the same satellites a security query is displayed at the start of a search.
- If the previously stored channels should be retained in the channel list and the new channels found be added to it, then press »••« (green).
- If »•« (red) is pressed, the saved channels will be deleted from the current channel list.
  – The »Digital Searching« menu appears, and the scan for TV channels begins.
  – The search is complete as soon as the message »Search is completed!« appears.

Note:

- The search can be aborted with »**EXIT**«.

12 Switch to the Channel Editor with »•••« (yellow);

<u>or</u>

press »**EXIT**« to end the setting.

Antenna settings, SCR system and searching for digital channels from a satellite automatically

Notes:

- Your TV supports SCR system (Single Channel Router – EN 50494).
- The following description about the LNB settings premise a substantial expertise about the satellite systems. Ask your specialist dealer.

1 Open the menu with »**MENU**«.

2 Select menu item »Settings« with »**V**«, »**Λ**«, »**<**« or »**>**« and press »**OK**« to confirm.

3 Select the menu item »Source« with »**>**« or »**<**« and press »**V**« to confirm.
– »Source« menu is active.

4 Select the line »Automatic Channel Search« with »**V**« or »**Λ**« and press »**OK**« to confirm.

5 Select the option »Satellite (DVB-S/S2)« with »**V**« or »**Λ**« and press »**OK**« to confirm.

6 Select the line »Antenna Settings« with »**V**« or »**Λ**« and press »**OK**« to confirm.
– The »Antenna Settings« menu is displayed.

7 Select and set the required option for the antenna settings with »**V**« or »**Λ**«:

Satellite
Press »**OK**« then select the required satellite with »**V**« or »**Λ**« and press »**OK**« to confirm.

LNB type
If your antenna system is equipped with a single-cable system multiswitch, use the option »Grundig SCR«. Press »**OK**« and select the »Grundig SCR« option with »**<**« or »**>**«.
Select the »LNB-Frequency High« line with »**V**« and enter the frequency with »**1...0**« in five digits.
Select the »LNB-Frequency Low« line with »**V**« and enter the frequency with »**1...0**« in five digits.
Confirm the settings with »•••« (green).

LNB Selection
Depending on the number of LNBs, select the option with »**<**« or »**>**«.
»1/2« if only 1 LNB is used; if two LNBs are used, select the required LNB (»1/2« or »2/2«).

User Band
Select the number of the antenna socket used with »**<**« or »**>**«.

UB Frequency (MHz)
Enter the required frequency for the selected antenna socket with »**1...0**«.

Notes:

- Use installation equipment supported / suggested by your SCR Switch.
- Other users / receivers connected to the system may be affected if the specified user band number and frequency is changed during installation.
- User band and user band frequency is specified on the SCR switch used; and each user / receiver must select a specified user band and user band frequency.
- With SCR satellite system, auto search by several users / receivers at the same time may cause problems.

8 Exit the antenna settings with »••••« (blue).

9 Select the Channel Type.
Press »**V**« or »**Λ**« to select whether you want to search for only digital channels (Digital) or only radio channels (Radio) or both (Digital + Radio) and press »**OK**« to select and mark or unmark the »Digital« and/or »Radio« items.

10 Select Scan Mode.
To select whether you want to search for only free digital television channels (Free), only scrambled digital television channels (Scrambled) or both (Free + Scrambled), press »V« or »Λ« and press **OK**« to select and mark or unmark the »Free« and/or »Scrambled« items.

11 Press »•« (red) to start searching.

Notes:

- When updating via the same satellites a security query is displayed at the start of a search.
- If the previously stored channels should be retained in the channel list and the new channels found be added to it, then press »••« (green).
- If »•« (red) is pressed, the saved channels will be deleted from the current channel list.
  – The »Digital Searching« menu appears, and the scan for TV channels begins.
  – The search is complete as soon as the message »Search is completed!« appears.

Note:

- The search can be aborted with »**EXIT**«.

12 Switch to the Channel Editor with »•••« (yellow);

<u>or</u>

press »**EXIT**« to end the setting.

Antenna settings for DiSEqC 1.0/1.1 and searching digital channels from a satellite automatically

Note:

- The following description about the LNB settings premise a substantial expertise about the satellite systems. Ask your specialist dealer.

1 Open the menu with »**MENU**«.

2 Select menu item »Settings« with »V«, »Λ«, »<« or »>« and press »**OK**« to confirm.

3 Select the menu item »Source« with »>« or »<« and press »V« to confirm.
– »Source« menu is active.

4 Select the line »Automatic Channel Search« with »V« or »Λ« and press »**OK**« to confirm.

5 Select the option »Satellite (DVB-S/S2)« with »V« or »Λ« and press »**OK**« to confirm.

6 Select the line »Antenna Settings« with »V« or »Λ« and press »**OK**« to confirm.
– The »Antenna Settings« menu is displayed.

7 Select and set the required option for the antenna settings with »V« or »Λ«:

Satellite
Press »**OK**« then select the required satellite with »V« or »Λ« and press »**OK**« to confirm.

LNB Type
Press »**OK**« then select the required LNB Type with »<« or »>«, enter the required data and confirm with »••« (green).

LNB Power
Set the LNB power to »Off«, »13/18V« or »14/19V« depending on the LNB type by using »<« or »>«.

LNB selection
See DISEqC mode.

DISEqC Mode

Based on the number of current satellite system, select the option »Off« »DiSEqC 1.0« or »DiSEqC 1.1« with »<« or »>«.

– »Off«: For satellite systems with single antenna.

–»DiSEqC 1.0« switch allows for receiving from maximum four satellites at the same time.

From »LNB Selection« use »<« or »> to make the »1/4«, »2/4«, »3/4« or »4/4« selection for the satellite that corresponds to relevant DiSEqC positions.

– »DiSEqC 1.1« switch allows for receiving from maximum sixteen satellites at the same time.

From »LNB selection« use »<« or »>« to make the selections between »1/16« and »16/16« for the satellite that corresponds to relevant DiSEqC positions.

8 Exit the antenna settings with »••••« (blue).

9 Select the Channel Type.
Press »V« or »Λ« to select whether you want to search for only digital channels (Digital) or only radio channels (Radio) or both (Digital + Radio) and press »**OK**« to select and mark or unmark the »Digital« and/or »Radio« items.

10 Select Scan Mode.
To select whether you want to search for only free digital television channels (Free), only scrambled digital television channels (Scrambled) or both (Free + Scrambled), press »V« or »Λ« and press **OK**« to select and mark or unmark the »Free« and/or »Scrambled« items.

11 Press »•« (red) to start searching.

Notes:

- When updating via the same satellites a security query is displayed at the start of a search.
- If the previously stored channels should be retained in the channel list and the new channels found be added to it, then press »••« (green).
- If »•« (red) is pressed, the saved channels will be deleted from the current channel list.
  – The »Digital Searching« menu appears, and the scan for TV channels begins.
  – The search is complete as soon as the message »Search is completed!« appears.

Note:

- The search can be aborted with »**EXIT**«.

12 Switch to the Channel Editor with »•••« (yellow);

<u>or</u>

press »**EXIT**« to end the setting.

Note:

- Repeat the procedure from point **1** for the settings of the second satellite or any others. These channels will be added to the bottom of the channel table.

Motor antenna setup (DiSEqC 1.2)

Note:

- The following description about the LNB settings premise a substantial expertise about the satellite systems. Ask your specialist dealer.

Your television supports DiSEqC 1.2 motorized satellite systems. This feature allows to control the satellite through your television.

Adjust the satellite antenna position according to each satellite. These settings can be stored and the antenna can be moved to a preset position.

1 Open the menu with »**MENU**«.

2 Select menu item »Settings« with »**V**«, »**Λ**«, »**<**« or »**>**« and press »**OK**« to confirm.

3 Select the menu item »Source« with »**>**« or »**<**« and press »**V**« to confirm.
– »Source« menu is active.

4 Select the line »Manual Channel Search« with »**V**« or »**Λ**« and press »**OK**« to confirm.

5 Select the option »Satellite (DVB-S/S2)« with »**V**« or »**Λ**« and press »**OK**« to confirm.

6 Activate the option »Antenna Settings« with »••••« (blue).
– The »Antenna Settings« menu is displayed.

7 Select the line »DiSEqC Mode« with »**V**« or »**Λ**« and select »DiSEqC1.2« with »**<**« or »**>**«.
– The line »DiSEqC 1.2 SETTINGS« is active.

8 Select the line »DiSEqC 1.2 SETTINGS« with »**V**« or »**Λ**« and press »**OK**« to confirm.
– »DiSEqC 1.2 SETTINGS« menu is displayed.

9 Use »**V**« or »**Λ**« to select necessary items.

Moving Mode
Set the Moving Mode with »**<**« or »**>**« to »Discrete« or »Continuous«.
– »Discrete«: Moves the antenna to west or east for the determined step size.
– »Continuous«: Moves the antenna to west or east continuously.

Step Size
With »**<**« or »**>**« select the number of steps the antenna has to rotate. »Step Size« is active when »Moving Mode« is selected as »Discrete«.

Move Motor
Adjusts the antenna for the selected satellite. Set the antenna to »West« with »**<**« and to »East« with »**>**«.
– »Go To Stored Position«: Moves the antenna to the preset satellite position. Maximum 50 positions can be saved. Select the setting with »••« (green) button, select predefined position with »**<**« or »**>**« and confirm with »••« (green) button. Antenna will mode to saved position.
– »Store Position«: Stores antenna's current position. Select setting with »•« (red) button, select recording position with »**<**« or »**>**« and confirm with »••« (green) button.

Limit Position
– Sets the limit position which the antenna will be able to move and allows the antenna to move within the determined limits. With »**<**« specify a limit position in »West« direction and with »**>**« specify a limit position in »East« direction.

Reset DiSEqC 1.2 Limit
– Resets the limit positions set for the antenna.

10 Press »**EXIT**« to end the setting.

Searching for digital channels from the cable provider automatically

1 Open the menu with »**MENU**«.

2 Select menu item »Settings« with »**V**«, »**Λ**«, »**<**« or »**>**« and press »**OK**« to confirm.

3 Select the menu item »Source« with »**>**« or »**<**« and press »**V**« to confirm.
– »Source« menu is active.

4 Select the line »Automatic Channel Search« with »**V**« or »**Λ**« and press »**OK**« to confirm.

5 Select the option »Cable (DVB-C)« with »**V**« or »**Λ**« and press »**OK**« to confirm.
– »Automatic Channel Search« menu is displayed.

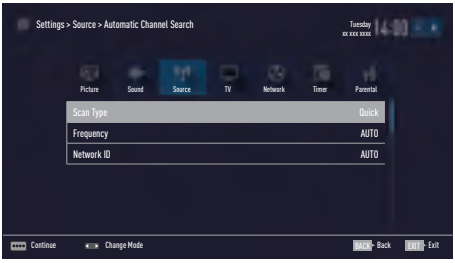

6 Select the line »Scan Type« with »**Λ**« or »**V**« and select the option »Quick« or »Full« scan type with »**<**« or »**>**«.
– »Quick« scanning function sets the channels according to the cable operator information in the broadcasting signal. Network ID« performs the installation that is suitable to your network. If you know the Network ID, please enter it. If you do not know the Network ID, please select »Auto« for »Frequency« and »Network ID«.
– If scanning cannot be performed with »Quick« option, select »Full«. All current channels are tuned and stored in »Full« scanning. This scanning process can take a long time. This option is recommended if your cable operator does not support quick scanning function.

Note:

- You can speed up the search. To do this, frequency and network ID information are required. You may get this data from your cable operator or find it in the Internet forums.

7 Confirm the »Continue« with »••••« (blue).

Note:

- Select whether to search for digital or analogue TV channels. To do this press »**V**« or »**Λ**« to select the option »Digital« or »Analog« and press »**OK**« to remove or apply the "small tick".

8 Press »•« (red) to start searching.

Notes:

- When updating via the same satellites a security query is displayed at the start of a search.
- If the previously stored channels should be retained in the channel list and the new channels found be added to it, then press »••« (green).
- If »•« (red) is pressed, the saved channels will be deleted from the current channel list.
  – The »Digital Searching« menu appears, and the scan for TV channels begins.
  – The search is complete as soon as the message »Search is completed!« appears.

Note:

- The search can be aborted with »**EXIT**«.

9 Switch to the Channel Editor with »•••« (yellow) ;

<u>or</u>

press »**EXIT**« to end the setting.

Searching for digital channels from the cable provider manually

1 Open the menu with »**MENU**«.

2 Select menu item »Settings« with »**V**«, »**Λ**«, »**<**« or »**>**« and press »**OK**« to confirm.

3 Select the menu item »Source« with »**>**« or »**<**« and press »**V**« to confirm.
– »Source« menu is active.

4 Select the line »Manual Channel Search« with »**V**« or »**Λ**« and press »**OK**« to confirm.

5 Select the option »Cable (DVB-C)« with »**V**« or »**Λ**« and press »**OK**« to confirm.

6 Select whether to search for digital or analogue TV channels.
To to this press »**V**« or »**Λ**« to select the option »Digital« or »Analogue« and confirm with »**OK**«.

7 With »**V**« select »Frequency (MHz)« and enter frequency (4-digit) directly with »**1...0**«; search will start.
–The search is finished when the channels found appear in the list.

8 Press »**EXIT**« to end the setting.

Searching for digital terrestrial TV channels automatically

1 Open the menu with »**MENU**«.

2 Select menu item »Settings« with »**V**«, »**Λ**«, »**<**« or »**>**« and press »**OK**« to confirm.

3 Select the menu item »Source« with »**>**« or »**<**« and press »**V**« to confirm.
– »Source« menu is active.

4 Select the line »Advanced« with »**V**« or »**Λ**« and press »**OK**« to confirm.

5 Select the line »Active Antenna Power« with »**V**« or »**Λ**«.
Switch on the antenna power supply for the antenna with »**<**« or »**>**« (»On«).

Important:

- The antenna power supply (5V) may only be switched on if the antenna is an active indoor antenna with a signal amplifier and it is not already supplied with a voltage via a mains plug (or similar supply). Otherwise you may cause a short circuit and irreparably damage your antenna.

6 Press »**BACK ←**« to go back one menu level.

7 Select the line »Automatic Channel Search« with »**Λ**« or »**V**« and press »**OK**« to confirm.

8 Select the option »Air (DVB-T/T2)« with »**Λ**« or »**V**« and press »**OK**« to confirm.

9 Select whether to search for digital or analogue TV channels.
To to this press »**Λ**« oder »**V**« to select the option »Digital« or »Analogue« and confirm with »**OK**«.

10 Press »•« (red) to start searching.

Notes:

- When updating via the same satellites a security query is displayed at the start of a search.
- If the previously stored channels should be retained in the channel list and the new channels found be added to it, then press »••« (green).

- If »•« (red) is pressed, the saved channels will be deleted from the current channel list.
  - The »Digital Searching« menu appears, and the scan for TV channels begins.
  - The search is complete as soon as the message »Search is completed!« appears.

Note:

- The search can be aborted with »**EXIT**«.

11 Switch to the Channel Editor with »•••« (yellow) ;

<u>or</u>

press »**EXIT**« to end the setting.

Searching for digital terrestrial TV channels manually

1 Open the menu with »**MENU**«.

2 Select menu item »Settings« with »**V**«, »**Λ**«, »**<**« or »**>**« and press »**OK**« to confirm.

3 Select the menu item »Source« with »**>**« or »**<**« and press »**V**« to confirm.
– »Source« menu is active.

4 Select the line »Advanced« with »**V**« or »**Λ**« and press »**OK**« to confirm.

5 Select the line »Active Antenna Power« with »**V**« or »**Λ**«.
Switch on the antenna power supply for the antenna with »**<**« or »**>**« (»On«)

Important:

- The antenna power supply (5V) may only be switched on if the antenna is an active indoor antenna with a signal amplifier and it is not already supplied with a voltage via a mains plug (or similar supply). Otherwise you may cause a short circuit and irreparably damage your antenna.

6 Press »**BACK ←**« to go back one menu level.

7 Select the line »Manual Channel Search« with »**Λ**« or »**V**« and press »**OK**« to confirm.

8 Select the option »Air« with »**Λ**« or »**V**« and press »**OK**« to confirm
– »Manual Channel Search« menu is displayed.

9 Select whether to search for digital or analogue TV channels.
To to this press »**Λ**« or »**V**« to select the option »Digital« or »Analogue« and confirm with »**OK**«.

10 Enter frequency (3-digit) directly with »**1...0**«.
– Search will start.
–The search is finished when the channels found appear in the list.

11 Press »**EXIT**« to end the setting.

Automatic service update

If this function is activated, possible changes of network operators are updated automatically.

The unit must be located in stand-by mode.

This updating affects all types of reception - terrestrial, cable and satellite.

1 Open the menu with »**MENU**«.

2 Select menu item »Settings« with »∨«, »∧«, »<« or »>« and press »**OK**« to confirm.

3 Select the menu item »Source« with »>« or »<« and press »∨« to confirm.
– »Source« menu is active.

4 Select the line »Advanced« with »∨« or »∧« and press »**OK**« to confirm.

5 Select the line »Automatic Service Update« with »∨« or »∧« and select the automatic update with »<« or »>« (»On«).

6 Press »**EXIT**« to end the setting.

Tuning analogue television channels

This setting is only necessary if you cannot receive any digital channels and you have not carried out an analogue search during initial setup.

The television channel can be set directly or using the search.

Setting all analogue television channels

The analogue television stations are listed in the channel list after the digital television stations.

Note:

- Plug the rooftop antenna cable (for analogue television stations) into the **ANT IN** socket on the television.

1 Open the menu with »**MENU**«.

2 Select menu item »Settings« with »∨«, »∧«, »<« or »>« and press »**OK**« to confirm.

3 Select the menu item »Source« with »>« or »<« and press »∨« to confirm.
– »Source« menu is active.

4 Select the line »Automatic Channel Search« with »∨« or »∧« and press »**OK**« to confirm.

5 Select the option »Air (DVB-T/T2)« or »Cable (DVB-C)« with »∨« or »∧« and confirm the source you are receiving analog broadcast from by pressing »**OK**«.

6 Select the option »Digital« with »∨« or »∧« and press »**OK**« to remove the small tick.

7 Press »•« (red) to start searching.

Notes:

- After starting the scan, a security query will appear. Press »••« (green) to confirm the option »Yes«.
  - All channel and favourites lists for the analogue channels will be deleted and compiled new.
  - The »Analog Searching« menu appears, and the scan for TV channels begins. Depending on the number of television channels received, this can easily take a few minutes.
  - The search is complete as soon as the »Search is completed!« appears.

Note:

- The search can be ended prematurely with »**EXIT**«.

8 Press »•••« (yellow) to switch to the Channel Editor;

<u>or</u>

press »**EXIT**« to end the setting.

Tuning the analogue television channels by entering the channel numbers

1 Open the menu with »**MENU**«.

2 Select menu item »Settings« with »**V**«, »**Λ**«, »**<**« or »**>**« and press »**OK**« to confirm.

3 Select the menu item »Source« with »**>**« or »**<**« and press »**V**« to confirm.
  – »Source« menu is active.

4 Select the line »Manual Channel Search« with »**V**« or »**Λ**« and press »**OK**« to confirm.

5 Select the option »Air (DVB-T/T2)« or »Cable (DVB-C)« with »**V**« or »**Λ**« and confirm the source you are receiving analog broadcast from by pressing »**OK**«.

6 Select the option »Analog« with »**V**« or »**Λ**« and press »**OK**« to confirm.
  – Menu is displayed.

7 Select the line »Program No« with »**V**« or »**Λ**« and press »**<**«, »**>**« or »**1...0**« to select the preset.

8 Select the line »Band« with »**V**« or »**Λ**«. To select »S« (special channel) or »C« (channel) options press »**<**« or »**>**«.

9 Select the line »Channel« with »**V**« or »**Λ**«. To enter the channel number step by step, press »**<**« or »**>**« or enter it directly with »**1...0**« or
  start a automatic scan with »••« (green) or »•••« (yellow).

Note:

- »The current system is displayed in the »System«. If the colour and/or sound is not functioning correctly, select »System« with »**V**« or »**Λ**. Select the required setting with »**<**« or »**>**«.
- When fine tuning is required, select »Fine Tuning« with »**V**« or »**Λ**« and tune with »**<**« or »**>**«.

10 To save the setting press »••••« (blue).

Note:

- To set other television channels, repeat steps from **7** to **10**.

11 Press »**EXIT**« to end the setting.

Changing stored analogue channels

If channels were stored with the automatic channel search during the tuning of the television channels, you can delete them. You can also change or enter the name of a channel and skip a channel.

Selecting channel lists

1 Open the menu with »**MENU**«.

2 Select menu item »Settings« with »**V**«, »**Λ**«, »**<**« or »**>**« and press »**OK**« to confirm.

3 Select the menu item »Source« with »**>**« or »**<**« and press »**V**« to confirm.
– »Source« menu is active.

4 Select the line »Channel Editor« with »**V**« or »**Λ**« and press »**OK**« to confirm.
– »Channel Editor« menu is displayed.

Note:

- Additional operations are explained in the following sections.

Deleting channels

1 In the »Channel Editor« menu, select the channel(s) you want to delete with »**V**«, »**Λ**«, »**<**« or »**>**«, and highlight the television channel by pressing »**OK**«.
–Channel is marked with »**✔**«.

Note:

- If several TV channels are to be deleted, press »**V** «, »**Λ**«, »**<**« or »**>**« to select these and mark each one with »**OK**«.

2 Activade the »Tools« menu with »•••« (yellow).

3 Select the line »Delete« with »**V** « or »**Λ**« and press »**OK**« to confirm.

4 To confirm deletion process, select the option »OK« with »**<**« or »**>**« and press »**OK**« to confirm;

<u>or</u>

to cancel deletion process, select the option »No« with »**<**« or »**>**« and press »**OK**« to confirm.

5 Press »**EXIT**« to close the menu.

Entering the analog channel names (maximum 8 characters)

1 In the »Channel Editor« menu, select the channel you want to rename with »**V**«, »**Λ**«, »**<**« or »**>**«, and highlight it by pressing »**OK**«.
– Channel is marked with »**✔**«.

2 Activade the »Tools« menu with »•••« (yellow).

3 Select the line »Rename« with »**V** « or »**Λ**« and press »**OK**« to confirm.

4 Delete the current channel name step-by-step with »••« (red).

5 Select the required character with »**V**«, »**Λ**«, »**<**« or »**>**« and move to the next character with »**OK**«.
– Using »**Shift**« ➡ »**OK**«, you can switch between uppercase letters / numbers and lowercase letters / special characters.
– Select »**Del**« to delete the character entered and press »**OK**« to confirm.

6 Confirm the channel name with »••« (green).

Note:

- To enter other channel names, repeat steps **1** to **6**.

Creating a list of favourites - analog channels

You can select your favourite channels and save them in up to four lists (FAV1 to FAV4).

1 In the »Channel Editor« menu, select the channel(s) you want to add in the favorites list with »V«, »Λ«, »<« or »>«, and highlight the television channel by pressing »OK«.
– Channel is marked with »✓«.

2 Activade the »Tools« menu with »•••« (yellow).

3 Select the line »Add To Fav.« with »V « or »Λ« and press »OK« to confirm.
– »Add to Fav.« menu is displayed.

4 Select the favorite list you want to add the selected channels with »V « or »Λ« and store with »OK«.
– The channels are marked in the Channel Editor with »❶«, »❷«, »❸« or »❹«.
– You can add the same channel in more than one favourites list.
– Each favourite list can contain maximum 255 channels.

Notes:

- You can delete channels from the favourites list. Press »•••« (yellow), select the favorites list the channel is in with »V« or »Λ« and press »OK« to confirm. Select the channel(s) you want to delete with »V«, »Λ«, »<« or »>«, and highlight the channel by pressing »OK«.
  Press »•••« (yellow) and select the line »Remove from Fav.« with »V« or »Λ« and confirm with »OK«. The channel you have selected is now deleted from the favorites list.
- When a channel stored in the favourite channel list is deleted channel order in the favourite list is updated.

5 Press »EXIT« to close the menu.

Displaying signal information

(only for digital television channels)

1 Open the menu with »MENU«.

2 Select menu item »Settings« with »V«, »Λ«, »<« or »>« and press »OK« to confirm.

3 Select the menu item »Source« with »>« or »<« and press »V« to confirm.
– »Source« menu is active.

4 Select the line »Advanced« with »V« or »Λ« and press »OK« to confirm.

5 Select the line »Signal Information« with »V« or »Λ« and press »OK« to confirm.
– »Signal Information« menu is displayed.

Notes:

- Signal information changes depending on the current source.
- Signal information is shown at the top of the menu. The more »Frequency« and »Signal Strength« bar stretches to the right, the more signal you have.
- The signal level not only depends on your receiver system, but also on the channel which is currently active. Remember this when aligning your antenna using the signal level display.

6 Press »EXIT« to close the menu.

Wireless LAN Module specification (if WiFi module is available)

Standard: IEEE802.11b/g/n
Frequency Range: Output Power (Max)
2400 MHz to 2483.5 MHz: <20dBm

Wireless LAN Module specification (if WiFi module is available)

Standard: IEEE802.11a/n/ac
Frequency Range: Output Power (Max)
5150 MHz to 5250 MHz: <23dBm
5250 MHz to 5350 MHz: <23dBm
5725 MHz to 5850 MHz: <23dBm

Bluetooth Module specification (If bluetooth module is available)

Frequency Range: Output Power (Max)
2400 MHz to 2483.5 MHz: <20dBm

Service information for dealers

This product complies with European Union directives and regulations below:
2014 / 53 / EU Radio equipment directive.
2009/125/EC: Directive and relevant for eco-design for products using energy as well as its following sub-directives.
278/2009: Regulation regarding eco friendly design requirements regarding energy consumption of uncharged external power sources and average active efficiency (for models with AC/DC adapters).
642/2009: Regulation regarding eco friendly design requirements for televisions.
801/2013 on Changes About Environment-Friendly Design Requirements for Televisions.

2017/1369/EU: Directive regarding Energy Labelling of Energy-Related products as well as its following sub-directives;
1062/2010: Regulation regarding energy labelling of televisions.
2011/65/EU: Directive on limitations on use of certain hazardous materials on electric, electronic domestic and office equipment.
To receive a copy of declaration of compliance (DoC) visit:
http://www.grundig.com/download/doc . You can access the declaration of compliance by running your television model on the product model search section by entering the model number on the cover of the user's manual.

Notes for WLAN reception

The following information is only applicable for devices that are sold in the countries enforcing EU regulations.
TV's wireless system can only be used in the countries given in the table below.

AT	BE	BG	CH	CY	CZ	DE	DK
EE	ES	FI	FR	GB	GR	HU	IE
IS	IT	LI	LT	LU	LV	MT	NL
NO	PL	PT	RO	SE	SI	SK	HR
TR							

The use the 5150 -5350 MHz band is restricted to indoor use only. (For Wi-Fi/Bluetooth built-in model or Wi-Fi Built-in model).

This device can also be operated in the countries outside Europe.

For the customers in Italy

Public use is subject to service provider's permission.
For the customers in Norway;
Radio equipment use is not allowed in a graphical area within 20 km diameter of Ny-Alesund, Svalbord.

For the customers in Turkey

This device's WLAN (Wifi) feature is only used indoors. In Turkey, outdoor use is not allowed. Make sure WLAN (Wifi) feature is closed when using outdoors.

For the customers in Norway

This sub-section does not apply to the geographical region within a radius of 20 km from the centre of NyÅlesund.

For the customers in Russia

Short Range Device with FHSS Modulation Applications.
Maximum 2.5 mW e.i.r.p.
for collecting telemetry information for automatic tracking and source calculation systems, 100mW e.i.r.p is the maximum allowed short range device density value permitted for use on outdoor applications without any limitation on installation height. For uses with other purposes, this applies to outdoor application in which this value does not exceed 10m above the ground.
Short range device density for indoor applications is 100mW e.i.r.p maximum.
Short range device applications with broadband modulation with DSSS and other than FHSS.
The maximum average density value for short range device applications with broadband modulation with DSSS and other than FHSS is 100mW e.i.r.p.
For only the purpose of compiling telemetry data for automatic monitoring and source estimation systems, maximum short range device allowed to be used in outdoor applications is 20 mW/MHz or 100 mW e.i.r.p.
Maximum density value for indoor use of short range devices is 10mW/MHz or 100 mW e.i.r.p.

For the customers in Ukraine

Maximum short range device density value for indoor uses, along with internal antenna with 6 dBi amplification factor, is 100 mW e.i.r.p.

Network interfaces

This product is intended for connection to the ADSL network.

Disposing of the packaging

The packing materials are dangerous for children. Keep the packing materials out of the reach of children.
The packing of your product is manufactured from recyclable materials. Dispose by classifying in accordance with waste instructions. Do not dispose along with normal household waste.

Environmental note

This product has been made from high-quality parts and materials which can be re-used and recycled.
Therefore, do not dispose of the product with normal household waste at the end of its life. Take it to a collection point for recycling electrical and electronic devices. This is indicated by this symbol on the product, in the operating manual and on the packaging.
Please find out about collection points operated by your local authorities.
Help protect the environment by recycling used products.

Explanation of the symbols which may be present on back side of the television set

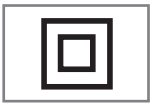

Class II or Double insulation. Television set doesn't require connection to electrical earth (ground).

Alternating current. The set works only only with AC line voltage in your household electricity.

Direct current. The set works only with AC/DC adapter.

Troubleshooting

If the remedies given below do not work, please consult an authorised GRUNDIG dealer. Please bear in mind that malfunctions can also be caused by external devices such as video recorders or satellite receivers.

Problem	Possible cause	Remedy
Screen lit (snow), but no station	Antenna cable	Is the antenna cable connected?
	No TV station programmed	Start a station search
Poor picture contrast	Picture settings incorrectly set	Adjust the brightness, contrast or colour setting
	Problem at station	Test with a different station
Interference to picture and/or sound	Interference from other devices	Change the position of the device
Ghosting, reflection	Channel setting	Automatic or manual channel setting/fine tuning
	Antenna	Have antenna cable or system checked
No colour	Colour intensity at maximum	Turn up the colour
	TV standard setting (if setting option is available)	Select the correct colour standard
	Problem at station	Test with an another channel
Picture but no sound	Volume set to minimum	Turn up or switch on the volume
Teletext missing or faulty	Problem at station	Test with an another channel
	Television station (has no teletext) or antenna system	Test another channel for fine tuning and ghosts
	Station signal too weak	Check the antenna system
Remote control does not work	No optical connection	Point the remote control at the television set
	Remote control batteries	Check the batteries, change if necessary
	Operating condition undefined	Switch off the television with the main power button for approximately 2 minutes
Picture is dark in PC mode	Incorrect setting for picture resolution and picture frequency on the PC	Change the setting on the PC (for example, picture resolution 1280 x 768, picture frequency 60Hz)
DMS device cannot be found	DMS device is not switched on or not started	Make sure that the DMS device is on and operating.
	Network connection settings are not made.	Check the network settings.

Low image quality (pixel) in WLAN mode	DMS (for example PC) is connected to the wireless network and away from the modem	Bring your DMS closer to the modem
Warnings about the connection problems on the display	Network Cable or wireless USB network device may be disconnected	Check network cable or wireless USB network device
	Modem do not have Internet connection or has problems	Make sure that your modem has Internet connection
Videos in video applications are lagging during playback in wireless connection	Internet connection speed is low.	Low Internet speed is a problem that is related with the speed of your subscription or a failure in the Internet infrastructure. Contact with your service provided (ISP).
Videos in video applications are lagging during playback in cable connection	Internet connection speed is low.	Low Internet speed is a problem that is related with the speed of your subscription or a failure in the Internet infrastructure. Contact with your service provided (ISP).
There are connection problems in Inter@ctive applications.	This may occur due to temporary problems in servers of these applications	Try connecting to the applications again

Note:

- This is a Class A product. During operation the device can cause radio interference. In this case the user may have to remedy this. Please contact your specialist dealer.

Depending on the television model.

Backligh

Manual setting for back lighting (only active if dynamic back lighting is switched to "OFF"). This setting also directly impacts power consumption.

Block Noise Reduction

This function can only be selected with digital reception sources and AV presets. It reduces any interference from artefacts (pixel blocks) from digital programmes due to MPEG compression (such as from DVB-T receivers and lower transmission rates or DVD players).

Boot loader version

Boot loader is a software application that is loaded by the device firmware from a bootcapable medium and then executed. The boot loader then loads further parts of the operating system.

Common Interface

Interface for a DVB receiver. Encrypted channels can only be viewed with a CA module suitable for the encryption system and in conjunction with the corresponding smart card.

Digilink

This function uses the CEC (Consumer Electronics Control) protocol.

CEC allows external devices connected to the HDMI sockets with an HDMI cable (e.g. DVD player) to be operated with a remote control.

DiSEqC

DiSEqC (Digital Satellite Equipment Control) is a digital system for controlling complex satellite systems with a motor or several LNBs.

DiSEqC is necessary if two or more satellite positions need to be controlled.

Dynamic Backlight

Here the device optimally adjusts the back lighting for the picture content by regulating the back lighting depending on the average picture brightness. If a picture has predominately dark areas, then the black level displayed is improved by downward adjustment of the back lighting (in this case the display of the dark areas is improved), and with predominantly bright picture material the back lighting is maximised in order to display these areas more brightly.

DLNA

Digital Living Network Alliance (DLNA) is an international association of entertainment electronics, IT hardware and mobile telephone manufacturers that aims to ensure perfect communication between IT devices in the home and personal use sector. The system lets you load and play any accessible files on the network on your Grundig LED TV simply by using the remote control – without the inconvenience of connecting a USB hard disk or burning DVDs.

Domain name system

The domain name system (DNS) is one of the most important services on the Internet. Its main function is to convert an Internet address into the corresponding IP address.

DTS Premium Sound™

DTS Premium Sound is an advanced surround sound solution package that extracts and positions the exact audio signals for an atmospheric surround sound experience using the built-in TV speakers. To complete the audio experience, post-processing and psychoacoustic methods are used which provide 3D audio playback in accordance with the video content - for optimising bass and dialogue and delivering unified and balanced volume for the entire content.

DVB-C

DVB-C (Digital Video Broadcasting – Cable) and the successor DVB-C2 standard are variations of DVB which is used for transmitting digital radio and television signals via a cable connection.

DVB-S

DVB-S (Digital Video Broadcasting – Satellite) is the name given to broadcasting DVB signals via satellite.

DVB-T

DVB-T (Digital Video Broadcasting – Terrestrial) is a variation of DVB which is used for transmitting digital radio and television signals via a cable connection.

Dynamic Contrast

The function dynamically and optimally adjusts the contrast for the respective picture content by analysing images and then altering this depending in a change in contrast. This increase the contract, however may also reduce the visible brightness levels in the picture.

Film mode

Detects and processes feature films automatically for all channel sources. This means you will always receive an optimal picture.
This functions in the modi 480i, 576i and 1080i in TV playback and for other channel sources.
If the »Film mode« is switched on for programmes without a feature film signal, minor problems such as picture freeze, defective subtitles or fine lines in the picture could occur.

Firmware version

Firmware is the term used for software that is embedded in a programmed chip (microcontroller). It is mostly stored in a flash memory, an EPROM or an EEPROM. The firmware contains functions for controlling the device.

Gamma

This setting establishes which brightness value should be displayed for which digital transmission value. Most recordings are transmitted with a gamma value of 2.2 (all Windows PCs and newer PCs with a MAC operating system work with this, older MAC systems and transmissions without colour profile mostly operate with a gamma value of 1.8).

Gateway IP

A gateway allows networks, which may be based on completely different protocols, to communicate with each other. In the home area, a combination of the router and the DSL modem are used as an Internet gateway.

Hardware version

Hardware in this context means the device.
This includes all components such as processor, display, etc.

HbbTV

HbbTV is the interactive successor of video text, which has content with a modern design, high resolution images and video¬sequences.

For full functionality of HbbTV, the TV must be connected to the internet.

HD

High Definition Television is a general term for a range of television standards which feature increased vertical, horizontal or temporal resolution.
Full HD is a feature of an HDTV capable device which is able to output or record an HD resolution of 1920 x 1080 pixels.

IP address

An IP address (Internet protocol address) is used to uniquely identify the address of computers and other devices in an IP network. The most well-known network in which IP addresses are used is the Internet. Here, for example, web servers are addressed using the IP address.
The IP address can be provided automatically by the router (automatic address) or can be entered manually in the router (static address). If it is entered manually, this address must also be entered in the hi-fi system.

JPEG

JPEG stands for Joint Picture Experts Group. It denotes a process for compressing picture files.

LIVE SHARE

With Live Share, you can stream all the content between WiDi™/Miracast™ certified mobile devices (smartphone or tablet) and the television via wi-fi. You can also easily stream HD content onto the television, and of course vice-versa by transmitting TV content to mobile devices.

LNB

Low Noise Block is located in the centre of a parabolic antenna.

It converts the satellite frequency from, for example, 10.7 to 11.75 or 11.8 to 12.75 GHz to the 950-2150 MHz range, thereby enabling the cable transmission using a coaxial cable and more recently also with optical fibre and reception with a satellite receiver.

MHL 2.0

The Mobile High Definition Link 2.0 transmits even high resolution content from any MHL-compatible mobile device to the television without delay. You can connect the micro USB connection of the mobile device to the MHL-compatible port on the television using an MHL-supporting HDMI cable.

MP3

MP3 is the abbreviation for MPEG-1 Level 3 and is based on the MPEG-1 standard, which was developed by the MPEG (Motion Picture Expert Group).

NAS (network access storage)

The abbreviation NAS is used for devices that provide data from a hard drive to a network. Network name (SSID) The network name (SSID – service set identifier) is the term used for the identification of a wireless network that is based on IEEE 802.11. Every wireless LAN has a configurable SSID, which uniquely identifies the wireless network. The character sequence of the network name can be up to 32 characters in length. It is configured in the base station (access point) of a wireless LAN and set on all clients which access it.

Network mask

The network mask or net mask, sometimes also referred to as a subnet mask, is a bit mask that separates an IP address into a network part and a device/host part. It is used in IP networks to make routing decisions.

Nois Reduction

Reduces the visible snow by displaying the picture a little less sharply and creating a slight blurring. Should therefore be used minimally with good picture material.

Perfect Clear

Improves the general image by means of a gentle blue hue (giving the appearance of greater sharpness) and improves the black level by setting this entirely to black from specific shade of back. This reduces the visible grey values in the dark areas of the picture.

Private IP address

Private IP addresses belong to particular IP address ranges that are not routed in the Internet. They can be used by anybody for private Networks, such as LANs. Many computer networks require complete connectivity at IP level, but only limited access to the Internet. If such a computer network has a private IP address range, it forms an intranet which cannot be accessed from the Internet as the Internet routers ignore private address ranges. A gateway or router that is placed in this private network and which has a public address in the Internet as well as a private IP address makes the connection to the Internet. This can be performed by a proxy or using NAT/PAT/Masquerading. As the address range used can only be viewed within the private network, the same range can also be used in other private networks. The unique nature of an IP address required by the Internet protocol is ensured by this restricted visibility.

Proxy server

A proxy or proxy server is a service program for computer networks that administers data transfer. It makes data transfer faster, and can also increase security by implementing access control mechanisms. The transfer is conducted between computers or programs in computer networks. On the server side, the proxy acts as a client; on the client side, it acts as a server.

Router

A router is a network component that links several computer networks. The router analyses (on the basis of layer 3 information) the network packages of a protocol it receives and forwards it to the intended destination network. Conventional routers work on layer 3 of the application layer. A router has an interface for every network connected to it. When data is received, the router determines the correct path to the destination and thereby the suitable interface via which the data can be transferred. For this it uses a locally available routing table that specifies via which router connection a particular network can be reached.

SCR (Single Channel Router)

Unrestricted single cable system.

If your antenna system is equipped with a single cable multi-switch, the televisions which are connected to this antenna system can receive television channels independently from one another.

Security (WEP/WPA)

WEP (wired equivalent privacy) is the standard encryption algorithm for WLAN. It controls both access to the network as well as ensuring the confidentiality and integrity of data. This procedure is considered insecure nowadays. For this reason, more recent WLAN installations should use the more secure WPA encryption.

Symbolrate

This is the number of transmitted symbols in the digital transmission technology per time unit

Transponder

A transponder receives data on a satellite and then transmits it again. For example, an earth station can transmit data signals for television channels to a geostationary satellite, which sends this back to earth. Any suitable satellite antenna with visual contact to the satellite can receive the signal.

UHD TV

Ultra High Definition Television (UHDTV or Ultra HDTV) and Ultra High Definition Video (UHDV) are a digital video format which includes two picture resolutions (4K and 8K). Resolution: 3840 × 2160 (UHD-1) or 7680 × 4320 pixels (UHD-2).

Vibrant Colour

Increases the colour contrast and the contrast adjustment. This setting is mostly too strong for use with normal pictures and should only be used where necessary (low or off) otherwise nuances in the image can be suppressed.

Wi-Fi

The Wi-Fi Alliance is an organisation that has taken on the task of certifying products from different manufacturers on the basis of the IEEE-802.11 standard, thereby ensuring that different wireless devices can operate in parallel.

On 31 October 2002, the consortium announced a new encryption technology – Wi-Fi Protected Access (WPA) – a part of the (then) forthcoming IEEE standard 802.11i which would replace the WEP encryption procedure, which was already regarded as insecure before the new standard came into force. After 802.11i came into force, the Wi-Fi group coined the term WPA2.

IEEE 802.11e is an industrial standard issued by the Institute of Electrical and Electronics Engineers (IEEE) and a supplement to the wireless LAN standard IEEE 802.11 for supporting the quality of service.

802.11e works according to a similar principle as the QoS procedure DiffServ. Data packages in the WLAN are marked by the sender and the access point is stopped in order to handle packages with higher priority.

With the aid of 802.11e, real-time application such as Voice over IP are better supported as they require a certain bandwidth in the network to ensure the connection is not interrupted if other network traffic creates too great a burden on the available data transfer rate.

INDEX

A

Access control for CA module and smart cards.....72
Accessible Functions.....53
Accessories.....63
Adjusting the volume.....31
Advanced picture settings.....27
Advanced Settings.....54
Arrange Initial set-up.....19
Audio data.....39
Audio description (audio subtitles).....53
Audio language.....32
Audio settings.....34
Automatic connection.....74
Automatic service update.....92
Automatic volume.....30
Auto sleep.....54
Auto tuning.....61

B

Blocking a television channel.....59
Blocking the multifunction switch.....59

C

Cable screen share (MHL).....70
Calling up a sub-page directly.....38
Change TV Name.....80
Changing stored analogue channels.....94
Changing the audio language.....52
Changing the Channel Editor for the digital channels.....23
Changing the font size of the channel guide.....35
Changing the image for initial screen and radio screen saver.....44
Changing the keyboard language.....52
Changing the menu language.....52
Changing the picture format.....33
Changing the PIN code.....59
Changing the subtitle language.....52
Concluding the settings.....28, 30
Connecting a mobile device.....70
Connecting an external device.....68
Connecting automatically by entering the network password.....20, 78
Connecting external data media.....40
Connecting headphones.....68
Connecting the antenna and power cord.....10
Connecting the TV to a “hidden” network.....81
Connecting to a home network with a LAN cable.....20
Connection options.....67
Connections on the television set.....13
Creating a list of favourites.....25
Creating a list of favourites - analog channels.....95

D

Date and Time Settings.....61
Deactivate and activate digital teletext.....37
Deactivate and activate HbbTV.....37
Deleting channel history.....64
Deleting channels.....94
Deleting channels in the Channel Editor.....24
Device Control.....66
Displaying all applications.....49
Displaying channels in the Channel Editor by antenna type.....24
Displaying information.....31
Displaying signal information.....95
Disposing of the packaging.....97
DTS Studio Sound™.....29

E

Electronic TV Guide.....35
Entering the analog channel names (maximum 8 characters).....94
Enter own names for the favourites lists (max. 7 characters).....26
Environmental note.....97
Equalizer.....30

G

General information.....7
Getting Started with Smart Inter@ctive TV.....48
GRUNDIG SCR System.....8

H

HbbTV Mode.....36
Headphones.....68

High definition – HD ready.....67

I

Image data.....39
Important notes on environmental protection.....8
Increasing character size.....38
Initial set-up.....17
Inserting batteries in the remote control.....12
Inserting the CA module.....72

L

Language settings.....52
LNB Settings.....84
Locking the menus.....58

M

Manual connection.....75, 79
Manual tuning.....61
Motor antenna setup (DiSEqC 1.2).....88
Move to desired time.....44
Moving the channels in the channel organizer to different channel positions.....24
Multimedia Server Mode.....45
Muting.....31

N

Navigating in the main menu.....50
Network connection.....73
Network interfaces.....97
Network Setup.....73
Night Mode.....29, 30
Normal text mode.....38
Notes for WLAN reception.....96
Notes on still images.....8

O

Off timer (Auto Off).....57
On timer (Auto On).....56
Opening the Programme Table.....23
Operation with common interface.....72
Overview.....13

P

Packing contents.....9
Page stop.....38
Parental Guidance.....58
Parental Settings.....58
Picture settings.....27, 34
Playback basic functions.....42
Playing selected tracks.....43
Playing the audio signal via the HiFi system.....69
Playing the video, music and image files with home network connection.....45
Power LED brightness.....54
Power save mode.....54, 55
Preparing for mounting on the VESA bracket.....11
Product information.....62

R

Receiving digital stations.....8
Remote control - all functions.....16
Removing the external data media.....40
Renaming AV channels.....26
Repeat functions.....44
Reset Functions.....64
Resetting PIN code.....60
Resetting the television to its original state.....64
Restore default settings.....28, 30
Restoring selected images.....64
Reveal answer.....38

S

Screen share with Liveshare connection.....71
Searching and selecting the active external device.....65
Searching channels by name in the Channel Editor.....24
Searching for all digital channels from a satellite automatically.....82
Searching for channels from the cable provider automatically.....89
Searching for channels from the cable provider manually.....90
Searching for digital television channels from a satellite manually.....83, 85, 86
Searching for digital terrestrial TV channels automatically.....90
Searching for digital terrestrial TV channels manually.....91

Searching forward.....44
Searching television channels with satellite signal (DVB-S).....21
Selecting a track or picture in steps (SKIP).....43
Selecting AV channels.....31
Selecting channel lists.....94
Selecting channels.....31
Selecting internet applications.....49
Selecting partition on HD files.....43
Selecting stations from lists.....31
Selecting the channel position for a mobile device.....70
Selecting the digital media server.....45
Selecting the display duration of the slide show.....42
Selecting the display mode.....41
Selecting the HDMI source from the television.....65
Selecting the menu.....41
Selecting the menu language.....65
Selecting the volume for the headphones.....68
Selecting titles on HD files.....43
Sequencing channels in the Channel Editor.....25
Service information for dealers.....96
Setting all analogue television channels.....92
Setting further channels.....82
Settings for connecting to the home network.....17
Settings in the USB setup menu.....41
Setting up or hanging.....11
Setting up with stand.....11
Set-up and safety.....5
Skipping the waiting time.....38
Sleep timer.....33, 56
SMART Inter@ctive TV 3.0 Feature.....47
SMART Inter@ctive TV 4.0 internet applications.....48
Software of the device.....62
Software update (Internet).....62
Software update (OAD).....62
Software update (USB).....62
Sorting channels in the favorites list.....25
Sound Mode.....29
Sound settings.....29
Special features of your television set.....7
Splitting the screen (Split Screen).....38
Stereo/dual channel.....29
Store logo view.....54
Subtitle Mode.....53
Subtitles.....32
Subtitle settings.....42
Switching bluetooth on / off and registering an external subwoofer.....29
Switching off the external device from standby mode.....65
Switching on and off.....31
Switching the device to standby.....66
Switching to automatic preview.....41

T

Teletext Mode.....38
The Digi Link functions of the television.....65
The file browser.....41
The main menu of the file browser.....41
Timer Functions.....56
TOP text or FLOF text mode.....38
Troubleshooting.....98
Tuning analogue television channels.....92
Tuning cable digital television channels (DVB-C).....21
Tuning channels.....17
Tuning terrestrial digital television channels (DVB-T).....22
Tuning the analogue television channels by entering the channel numbers.....93
Turning on external device from standby mode.....65
Turn the picture display.....44
TV operation – additional functions.....33
TV operation – Basic functions.....31

U

USB keyboard and mouse.....48
USB Opertion.....39
Using a DVD recorder, DVD player, video recorder or set-top box.....68
Using external devices.....65
Using HbbTV.....37

V

Video data.....39

W

Watching a blocked television channel.....60
WEB Browser.....51
Web browser applications.....51
Web browser menu.....51
What is common interface?.....72
What is HbbTV?.....36
What is LIVESHARE?.....71
Wired network.....73
Wired network connection.....73
Wired network settings.....74
Wireless network.....76
Wireless network connection.....76
Wireless network settings.....76
Wireless screen share (Liveshare).....71
Wireless WPS network connection through by pressing a button.....77
Wireless WPS network connection with PIN.....77

Z

Zap function.....32
Zoom function.....33

Grundig Intermedia GmbH • Thomas–Edison–Platz 3 • D–63263 Neu–Isenburg

GRUNDIG

www.grundig.com